ACMAVOLPAK

ELECTRICAL SCHEMES

ELECTRICAL SCHEMES

ACMAVOLPAK

Costumer: NURTURE, INC.
(USA)

Order nº: *13.025*

Type machine: *SM-360 F4 WD*

Serial nº: *2498 1A/SM-360 F4 WD*

Aplicator Nº 1 *24981E / CA-998/4*

Filler Nº 1 *24981I / MAS-734*

Filler Nº 4 *24981S / EA-100*

MAIN VOLTAGE	480 V 60 Hz
WORKING VOLTAGE	480 V 60 Hz
OPERATION VOLTAGE	24 VDC
POWER	50 kVA
INSTALATION'S NORM	EN-60204
INTENSITY	59,9 Amp.

Control panel language	English
Part lists language	English

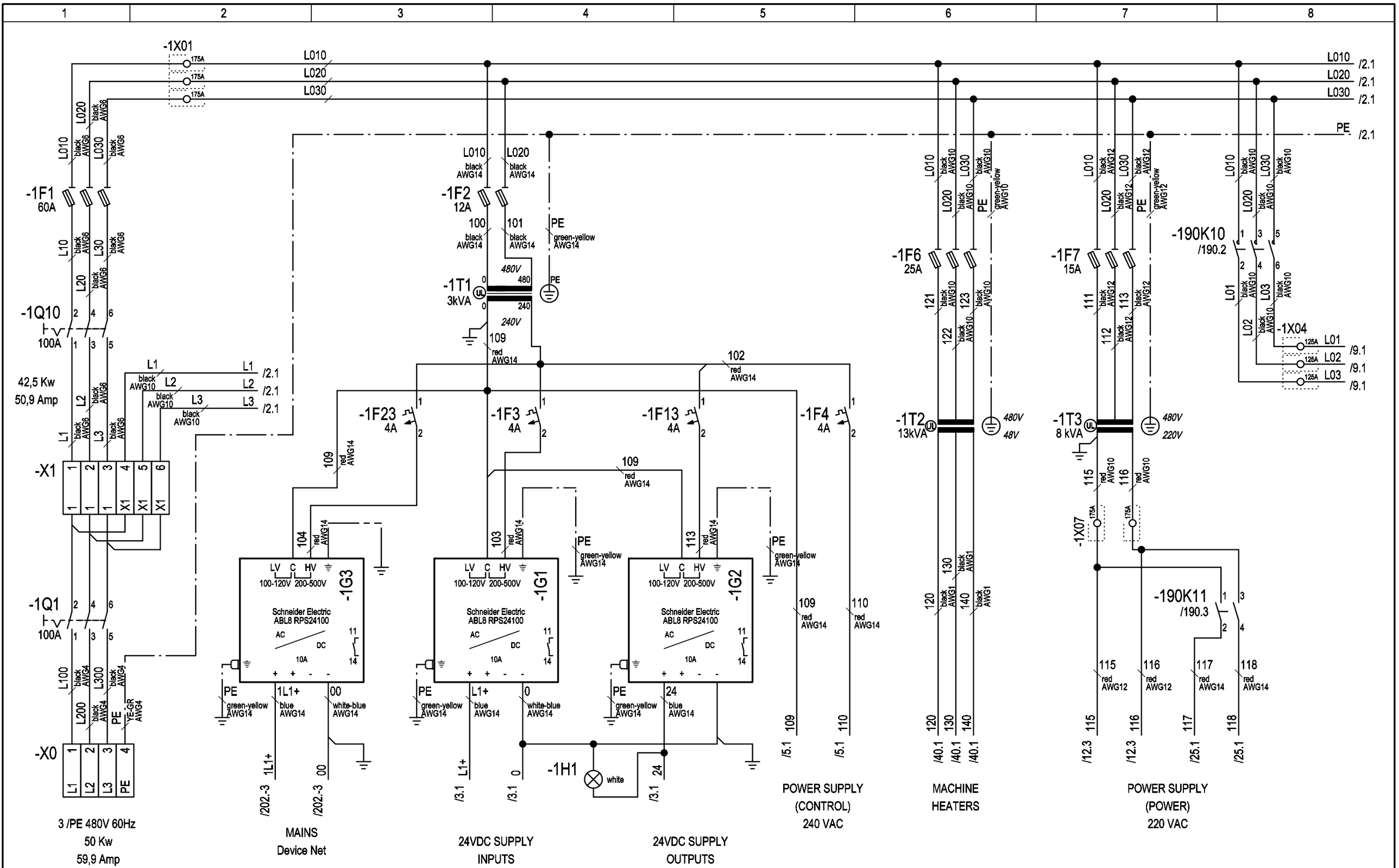

3				Date	\Z72	NURTURE, INC. (USA)	ACMAVOLPAK	TYPE OF MACHINE: SM-360 F4 WD	MAIN POWER
2				Draw.	A.LLEONART			PROJECT Nº: 24981A	
1	DIN			Print.	22.07.2014			\Z69	
	Modification	Date	Name	Norm	DIN	Nº ORDER 13.025			

=
+
Sheet 1
Next 2

PATH: 24981A/Diagrams/01-Electrical schemes/1

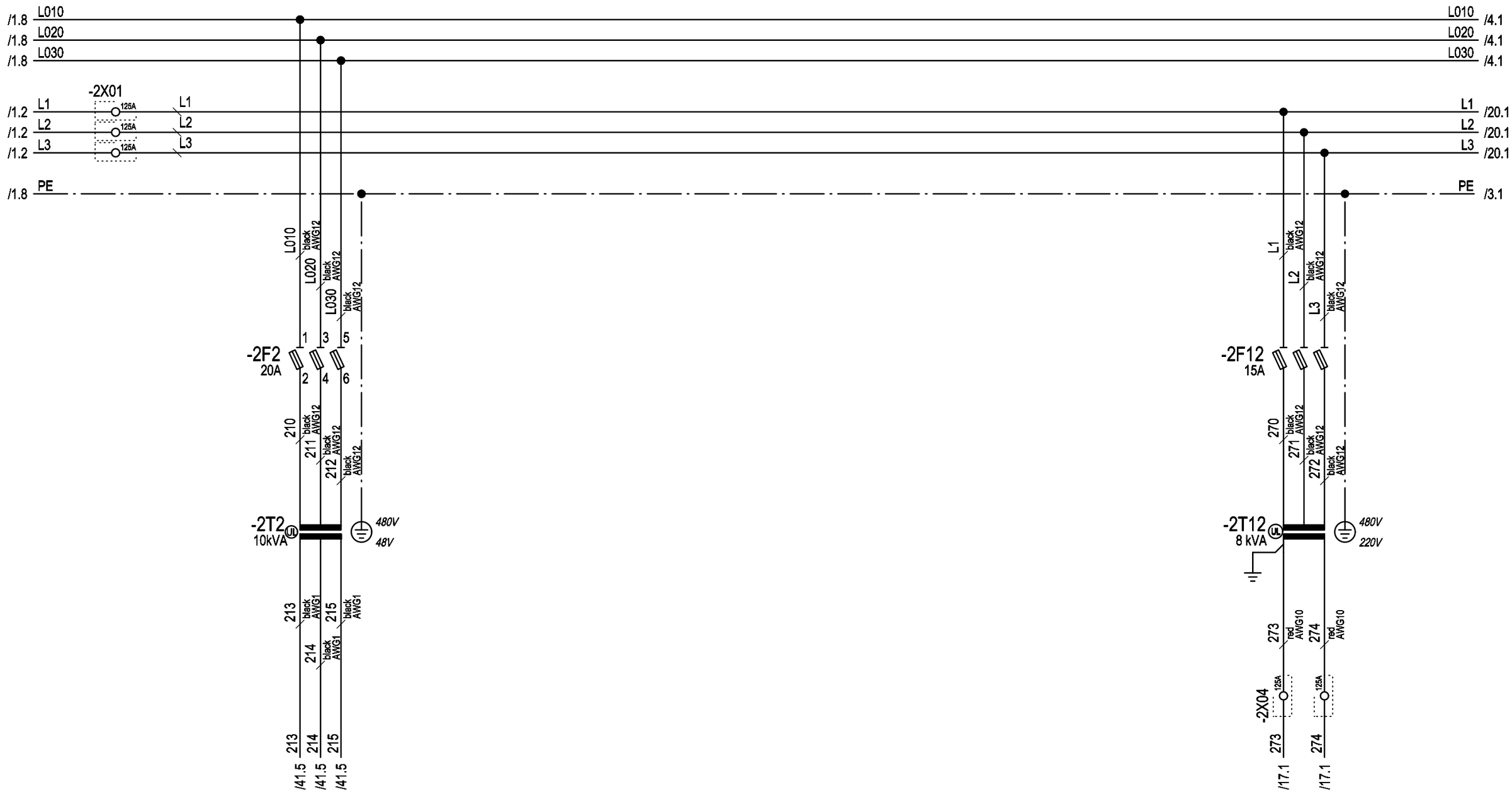

3				Date	\Z72	NURTURE, INC.	ACMAVOLPAK	TYPE OF MACHINE: SM-360 F4 WD	MAIN POWER	=
2				Draw.	A.LLEONART	(USA)		PROJECT Nº: 24981A		+
1	DIN			Print.	22.07.2014					Sheet 2
	Modification	Date	Name	Norm	DIN	Nº ORDER 13.025		\Z69		Next 3

PATH: 24981A/Diagrams/01-Electrical schemes/2

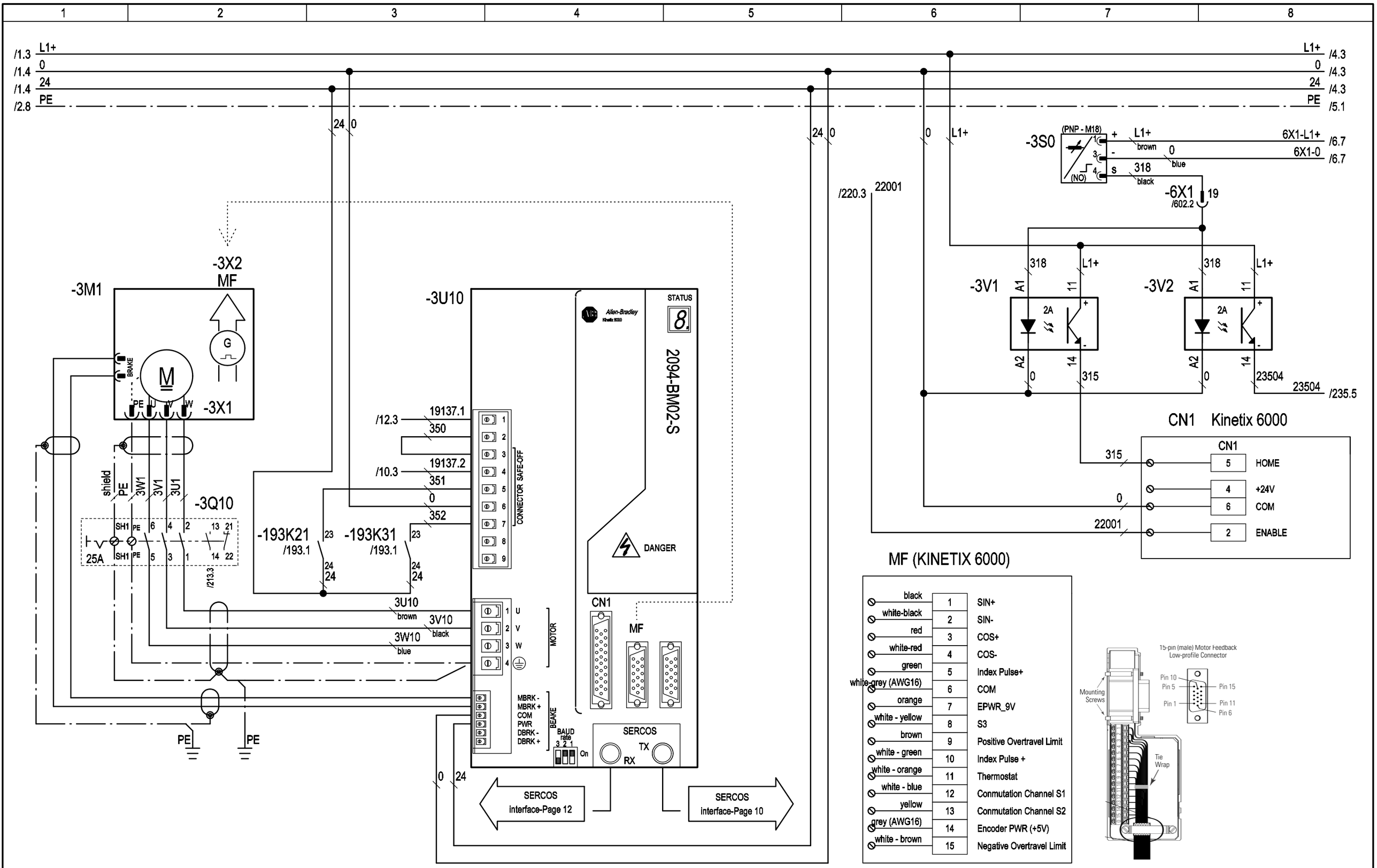

3				Date	\Z72	NURTURE, INC. (USA)	ACMAVOLPAK	TYPE OF MACHINE: SM-360 F4 WD	MAIN MOTOR	=
2				Draw.	A.LLEONART			PROJECT Nº: 24981A		+
1	DIN			Print.	22.07.2014					Sheet 3
	Modification	Date	Name	Norm	DIN	Nº ORDER 13.025		\Z69		Next 4

PATH: 24981A/Diagrams/01-Electrical schemes/3

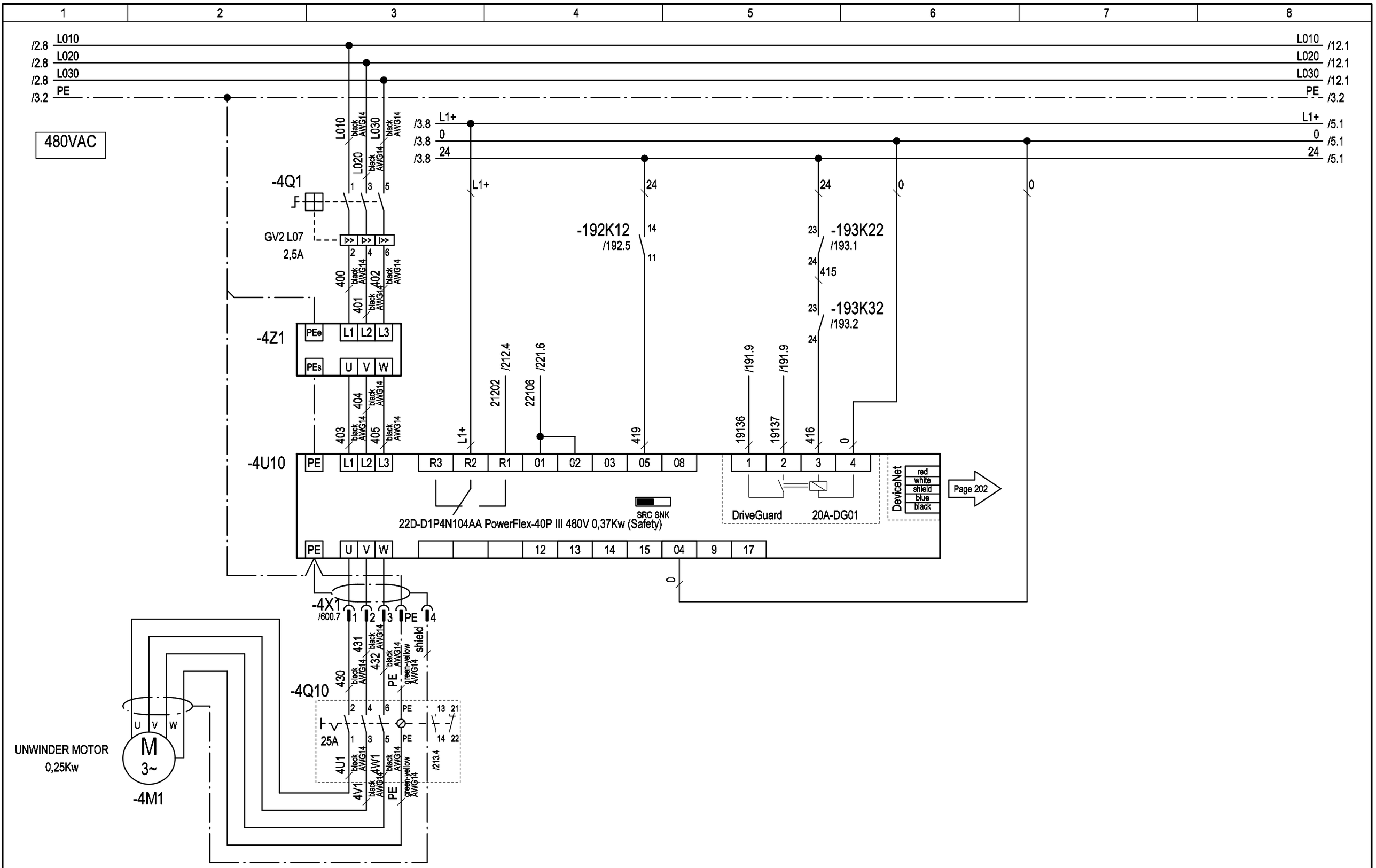

3				Date	\Z72	NURTURE, INC. (USA)	ACMAVOLPAK	TYPE OF MACHINE: SM-360 F4 WD	POWER UNWINDER MOTOR	=	
2				Draw.	A.LLEONART			PROJECT Nº: 24981A		+	
1	DIN			Print.	22.07.2014					Sheet 4	
	Modification	Date	Name	Norm	DIN	Nº ORDER 13.025		\Z69		Next 5	

PATH: 24981A/Diagrams/01-Electrical schemes/4

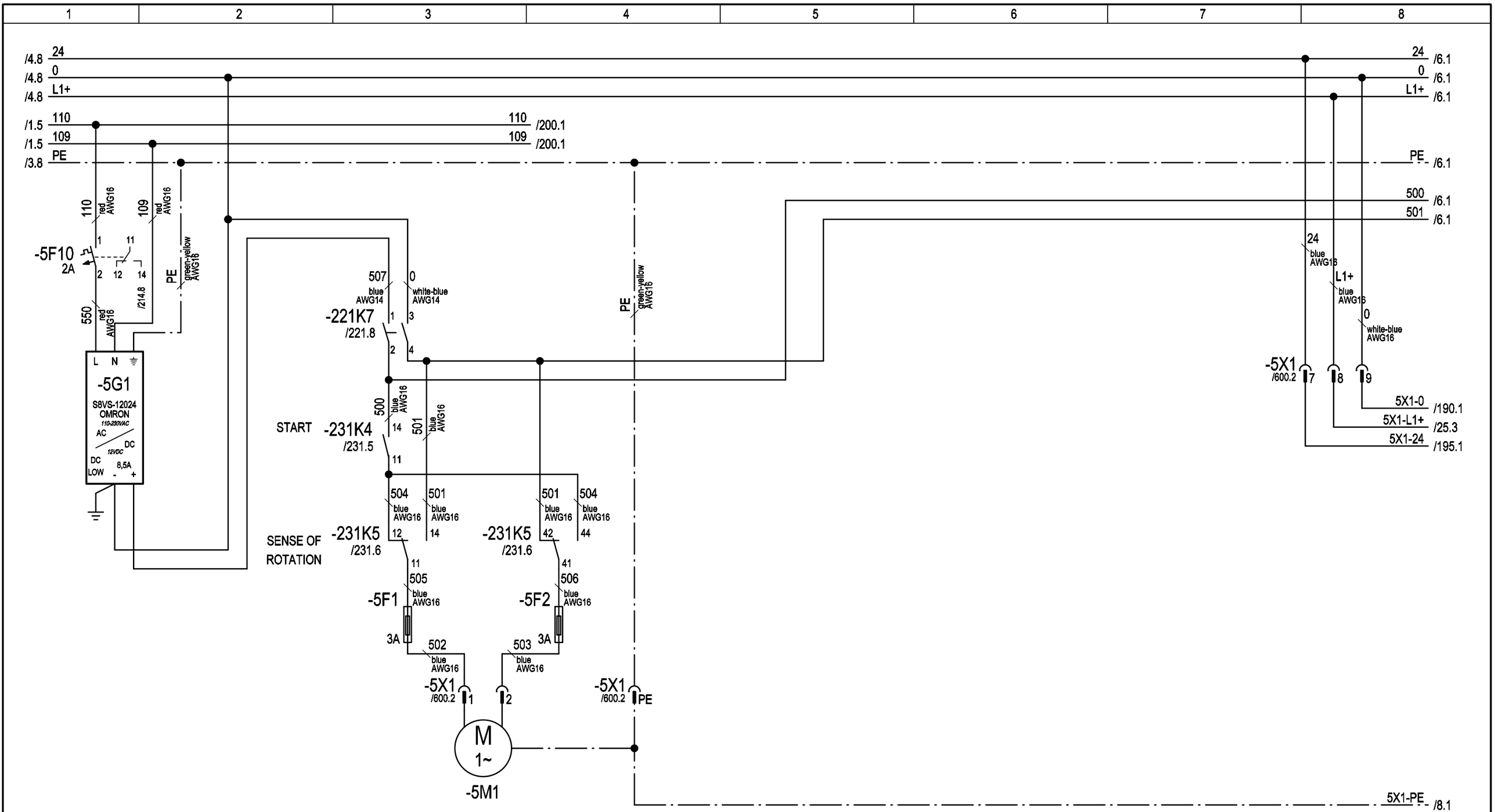

3				Date	\Z72	NURTURE, INC. (USA)	ACMAVOLPAK	TYPE OF MACHINE: SM-360 F4 WD	UNWINDER	=
2				Draw.	A.LLEONART			PROJECT Nº: 24981A		+
1	DIN			Print.	22.07.2014					Sheet 5
	Modification	Date	Name	Norm	DIN	Nº ORDER 13.025		\Z69		Next 6

PATH: 24981A/Diagrams/01-Electrical schemes/5

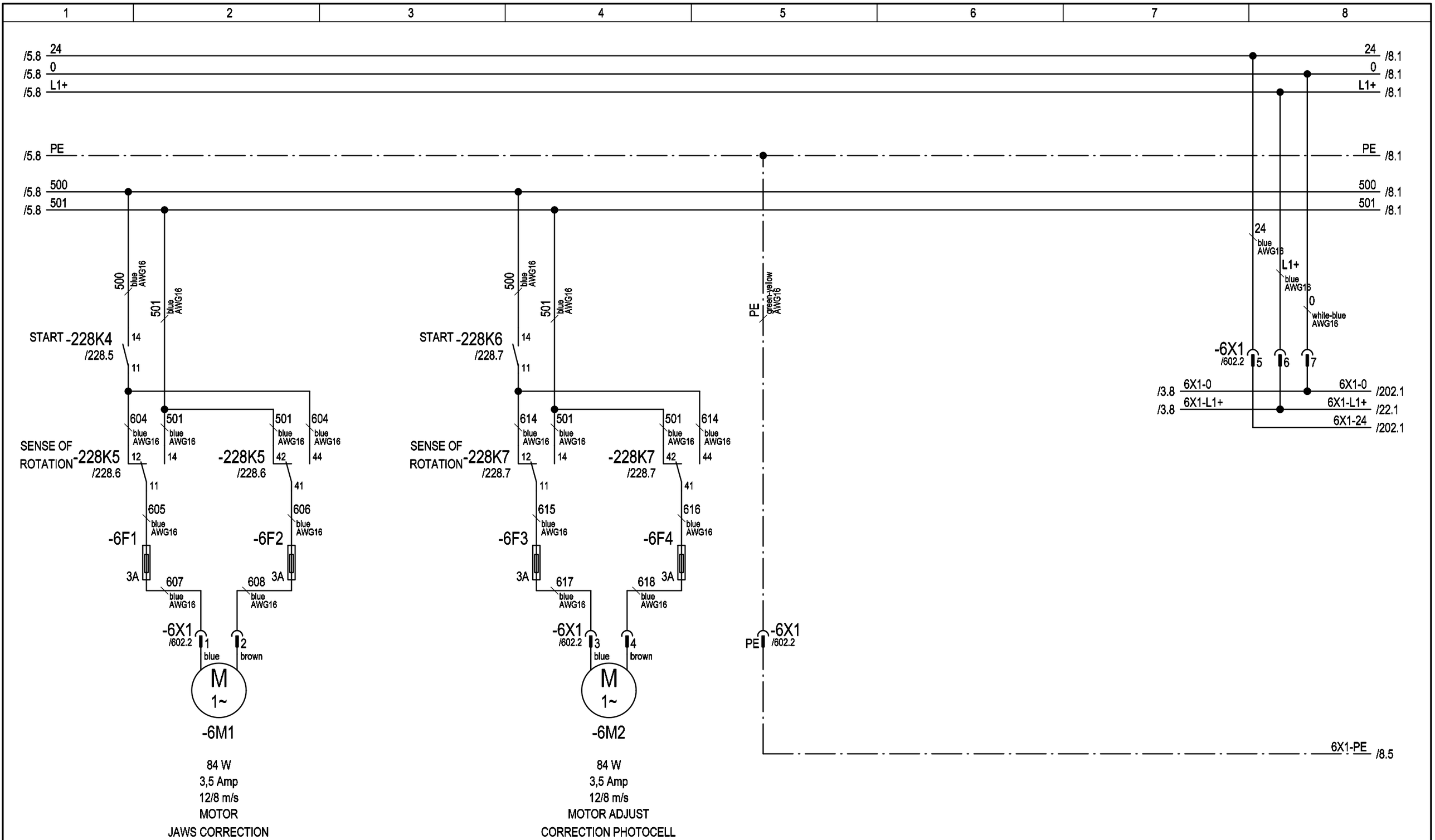

3				Date	\Z72	NURTURE, INC.	ACMAVOLPAK	TYPE OF MACHINE: SM-360 F4 WD	JAWS CORRECTION	=	
2				Draw.	A.LLEONART	(USA)		PROJECT Nº: 24981A		+	
1	DIN			Print.	22.07.2014					Sheet 6	
	Modification	Date	Name	Norm	DIN	Nº ORDER 13.025		\Z69		Next 8	

PATH: 24981A/Diagrams/01-Electrical schemes/6

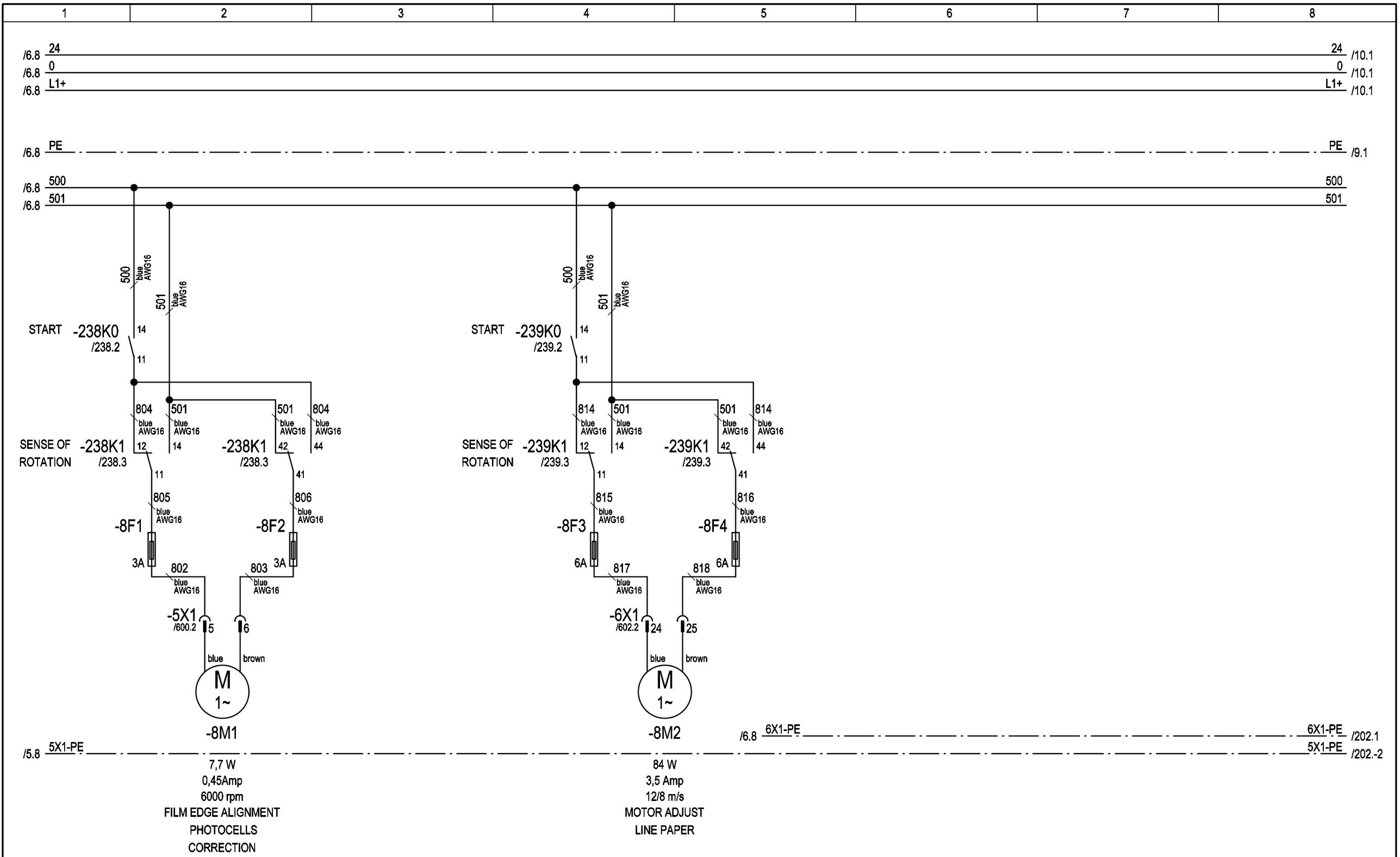

3				Date	\Z72	NURTURE, INC. (USA)	ACMAVOLPAK	TYPE OF MACHINE: SM-360 F4 WD	JAWS CORRECTION	=
2				Draw.	A.LLEONART			PROJECT Nº: 24981A		+
1	DIN			Print.	22.07.2014					Sheet 8
	Modification	Date	Name	Norm	DIN	Nº ORDER 13.025		\Z69		Next 9

PATH: 24981A/Diagrams/01-Electrical schemes/8

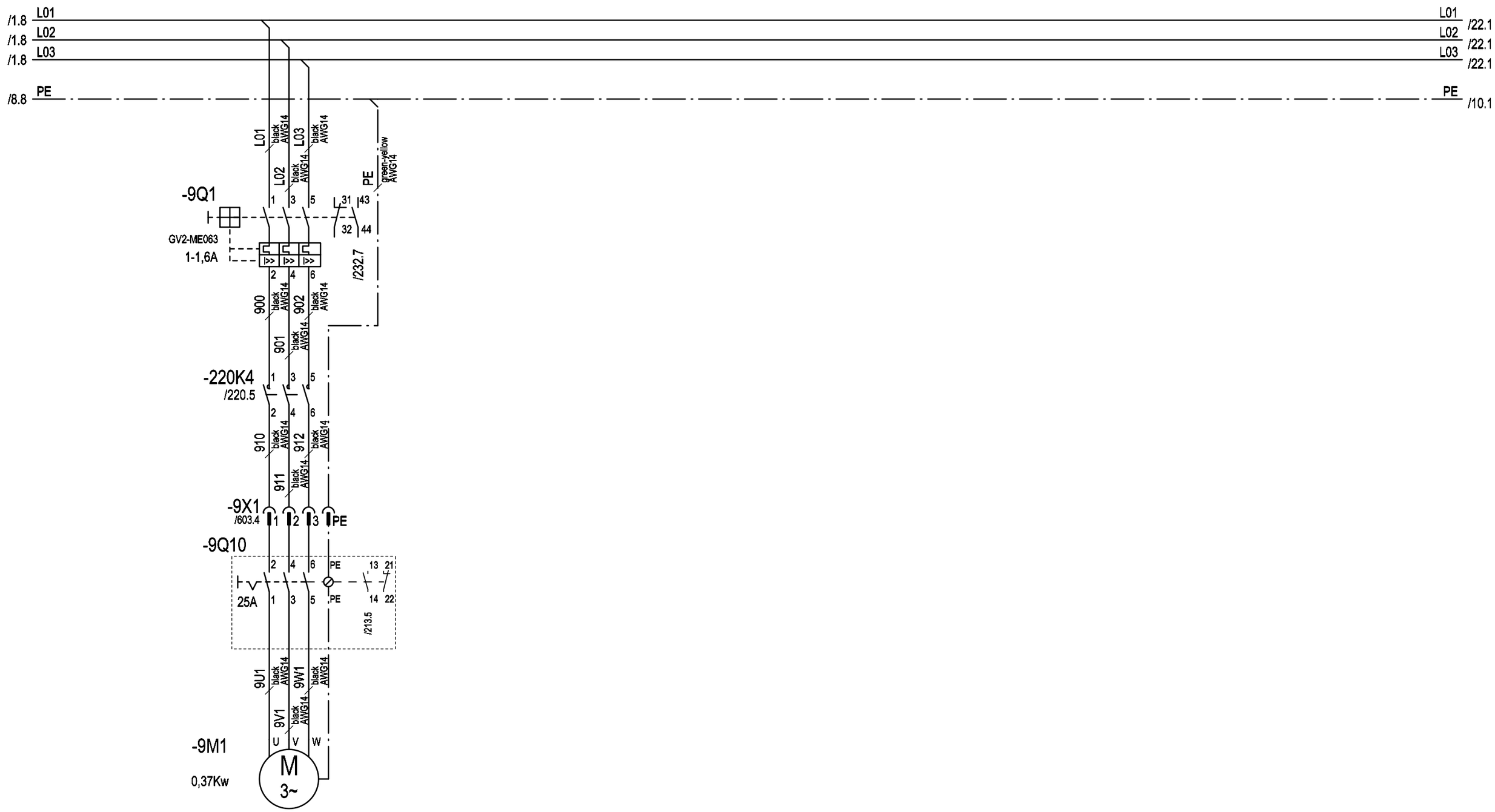

3				Date	\Z72	NURTURE, INC. (USA)	ACMAVOLPAK	TYPE OF MACHINE: SM-360 F4 WD	SCRAP DUST-COLLECTOR	=
2				Draw.	A.LLEONART			PROJECT Nº: 24981A		+
1	DIN			Print.	22.07.2014					Sheet 9
	Modification	Date	Name	Norm	DIN	Nº ORDER 13.025		\Z69		Next 10

PATH: 24981A/Diagrams/01-Electrical schemes/9

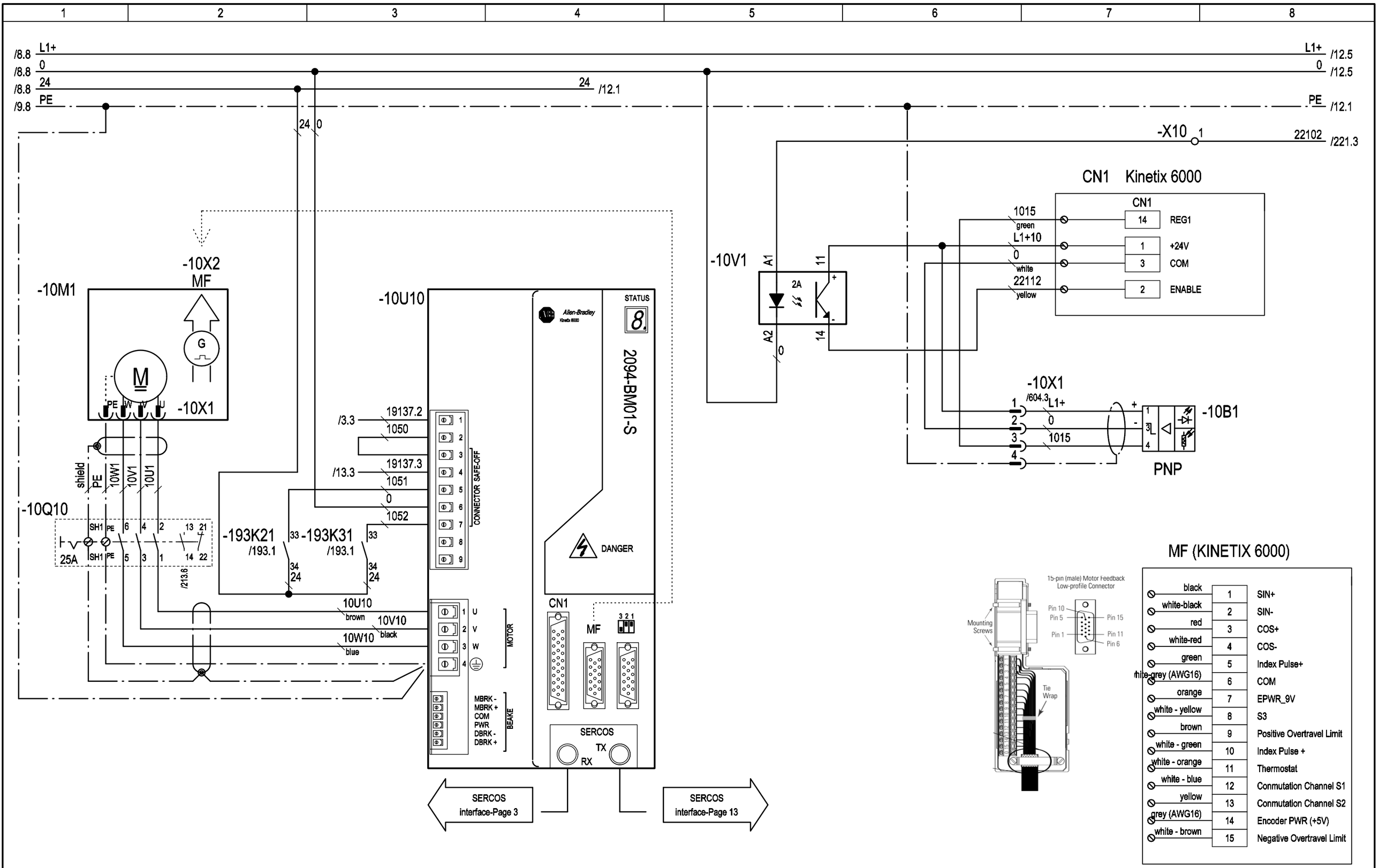

3				Date	\Z72	NURTURE, INC. (USA)	ACMAVOLPAK	TYPE OF MACHINE: SM-360 F4 WD	POWER FILM FEEDER
2				Draw.	A.LLEONART			PROJECT Nº: 24981A	=
1	DIN			Print.	22.07.2014				+
	Modification	Date	Name	Norm	DIN	Nº ORDER 13.025		\Z69	Sheet 10
									Next 10.1

PATH: 24981A/Diagrams/01-Electrical schemes/10

Figure A.13
2094-PRS2, -PRS3, -PRS4, -PRS5, -PRS6, -PRS7, and -PRS8 (Slim)

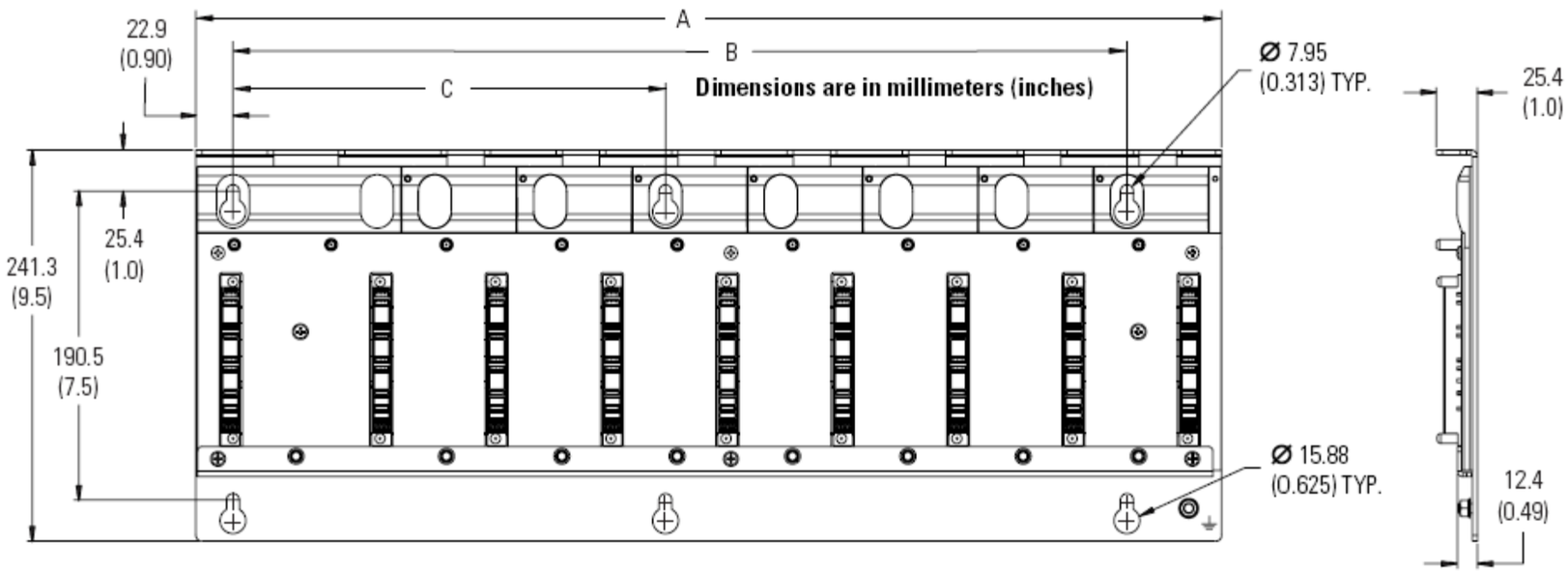

Catalog Number	Description	Dimension A mm (in.)	Dimension B mm (in.)	Dimension C mm (in.)
2094-PRS3	3 axis power rail	276.9 (10.90)	195.6 (7.70)	N/A

Typical Single Drive Safe-off Configuration

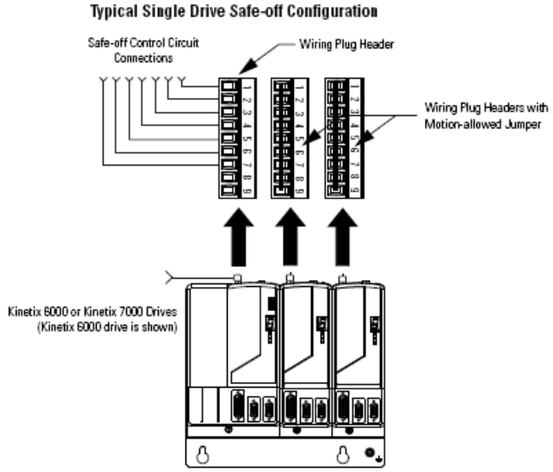

9-pin Safe-off (SO) Connector - Kinetix 6000 Drive

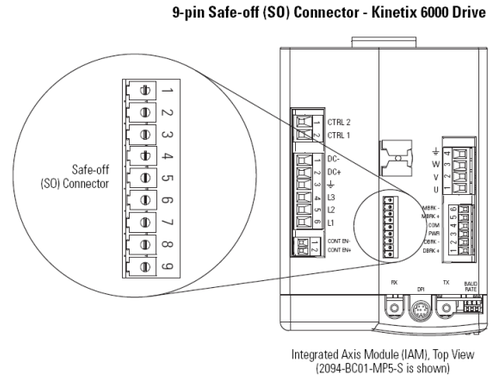

9-pin Safe-off (SO) Connector

Safe-off (SO) Connector Pin	Also Applies to These SO Connector Headers	Description	Signal
1	• Wiring plug header used in single-drive applications • First-drive wiring header (2090-XNSM-W) used in multiple-drive applications	One side of the normally-closed monitoring contact of relay 2	FDBK2+
2		Other side of the normally-closed monitoring contact of relay 2	FDBK2-
3		One side of the normally-closed monitoring contact of relay 1	FDBK1+
4		Other side of the normally-closed monitoring contact of relay 1	FDBK1-
5		Coil of safety-relay 2	SAFETY ENABLE2+
6		Return for safety-relay coil power (both relays)	SAFETY ENABLE-
7		Coil of safety relay 1	SAFETY ENABLE1+
8	• Wiring plug header • Motion-allowed jumper	Output power for continuous enable of the safety function, 500 mA max	24V+
9		Output power return used for continuous enable of safety function	24V_COM

IMPORTANT Pins SO-8 (internal 24V+ supply) and SO-9 (24V_COM) are used only by the motion-allowed jumper to defeat the safe-off function. When the safe-off function is in operation, the 24V supply must come from an external source.

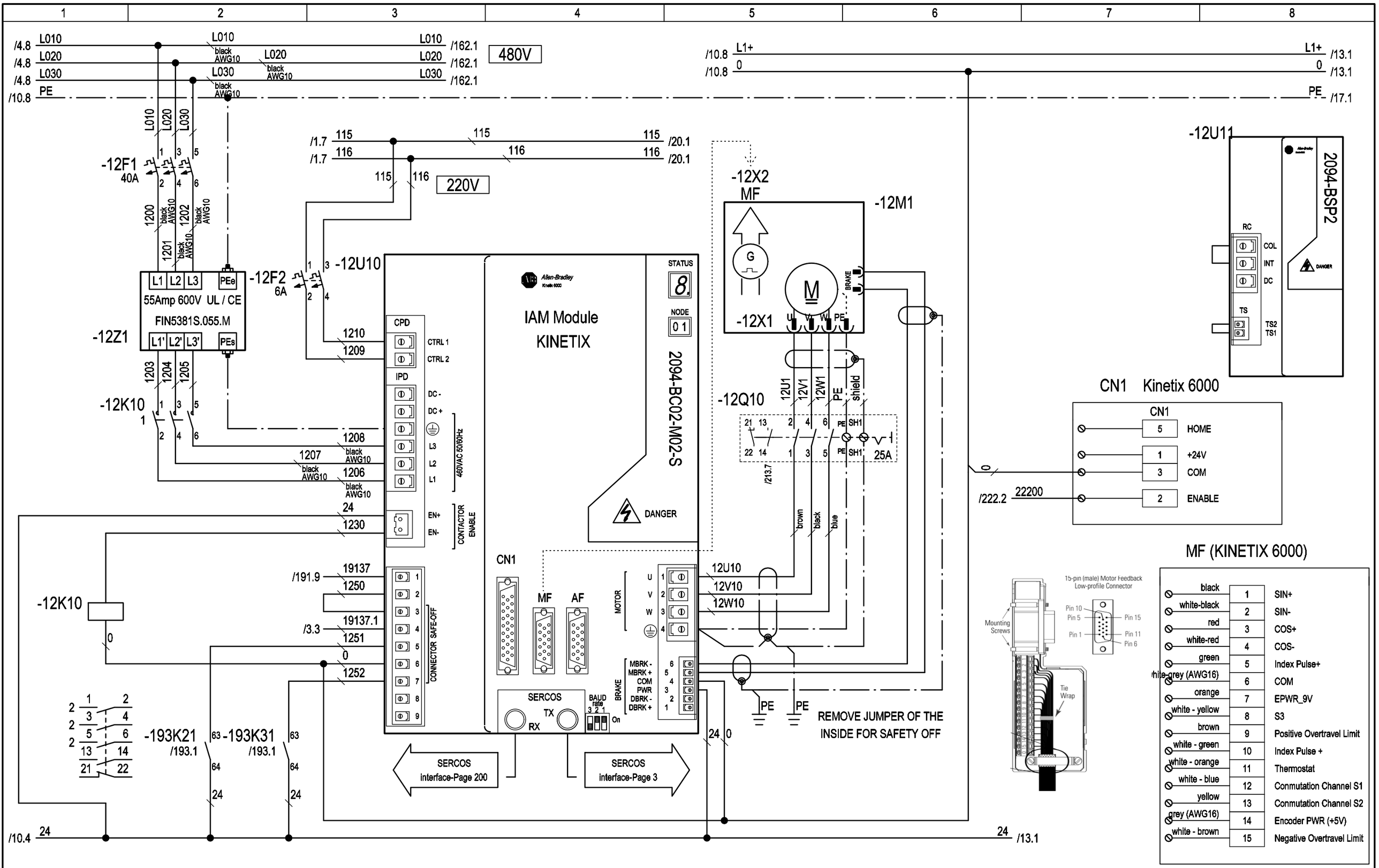

3				Date	\Z72	NURTURE, INC. (USA)	ACMAVOLPAK	TYPE OF MACHINE: SM-360 F4 WD	POWER SERVOMOTOR (TRANSPORT GRIPPER)
2				Draw.	A.LLEONART			PROJECT Nº: 24981A	
1	DIN			Print.	22.07.2014			\Z69	
	Modification	Date	Name	Norm	DIN	Nº ORDER 13.025			

=	
+	
Sheet	12
Next	13

PATH: 24981A/Diagrams/01-Electrical schemes/12

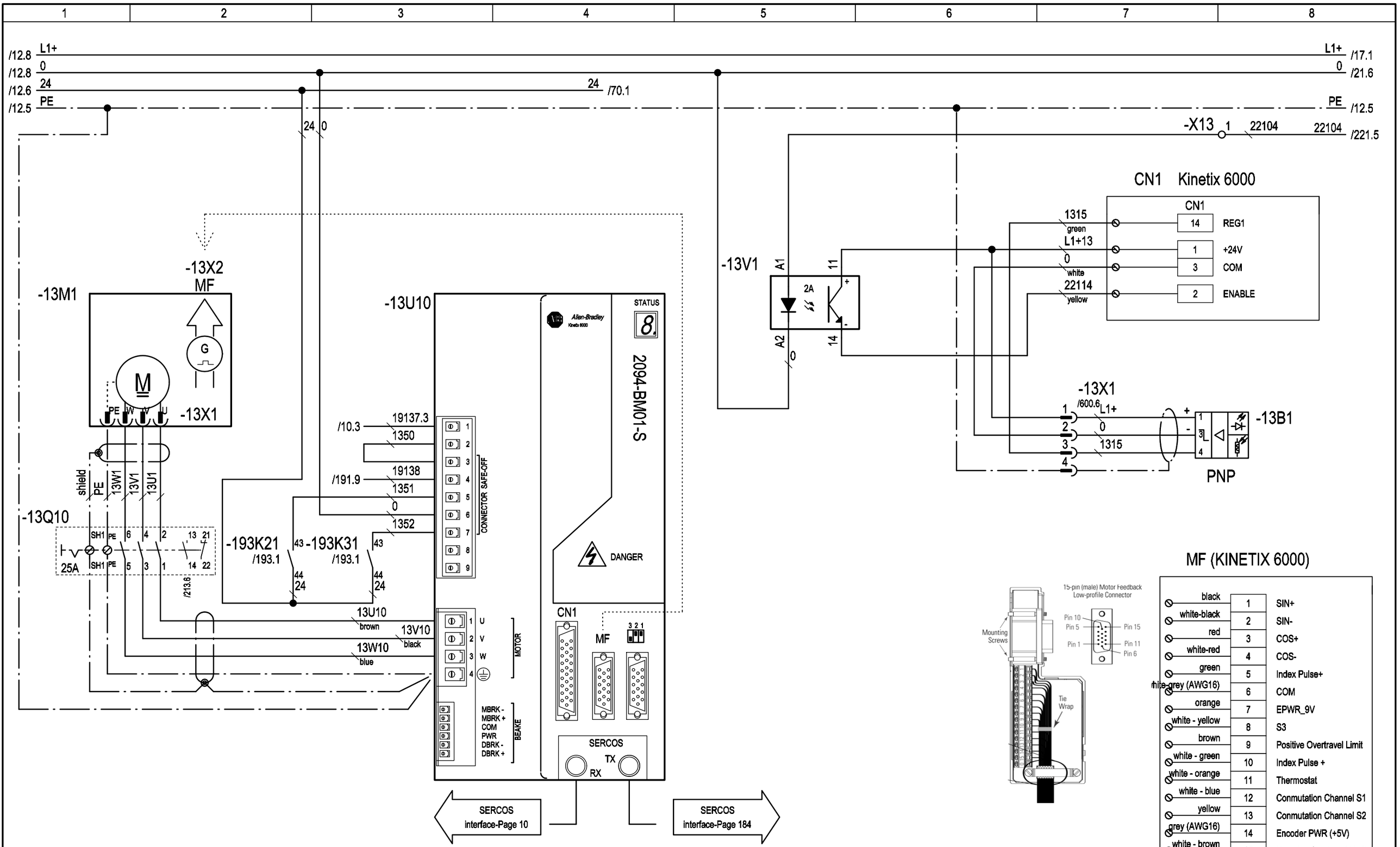

3				Date	\Z72	NURTURE, INC. (USA)	ACMAVOLPAK	TYPE OF MACHINE: SM-360 F4 WD	UNWINDER POWER POSITIONING FIM
2				Draw.	A.LLEONART			PROJECT Nº: 24981A	=
1	DIN			Print.	22.07.2014				+
	Modification	Date	Name	Norm	DIN	Nº ORDER 13.025		\Z69	Sheet 13 / Next 15

PATH: 24981A/Diagrams/01-Electrical schemes/13

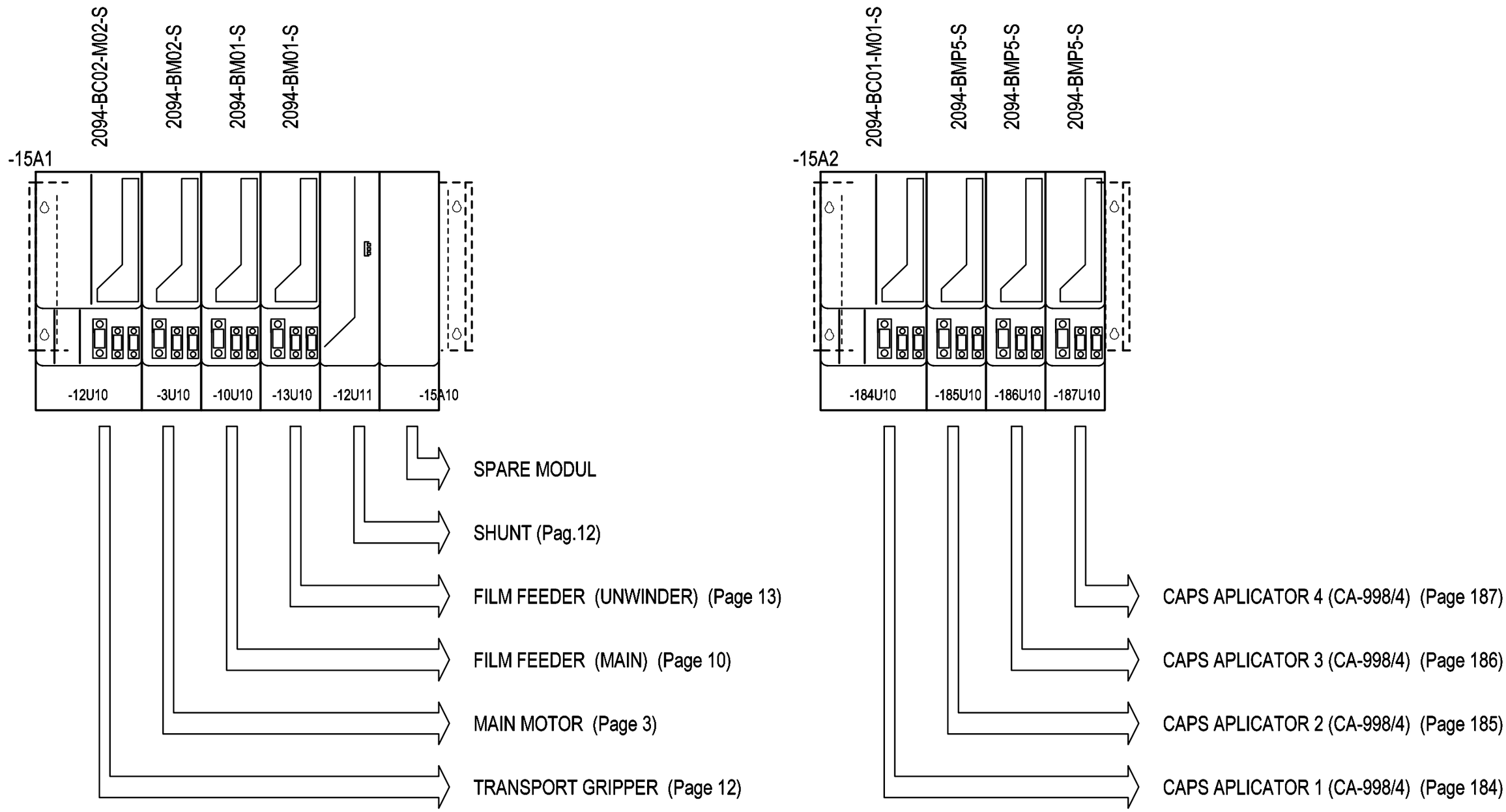

3				Date	\Z72	NURTURE, INC. (USA)	ACMAVOLPAK	TYPE OF MACHINE: SM-360 F4 WD	RACK DISTRIBUTION	=
2				Draw.	A.LLEONART			PROJECT Nº: 24981A		+
1	DIN			Print.	22.07.2014					Sheet 15
	Modification	Date	Name	Norm	DIN	Nº ORDER 13.025		\Z69		Next 17

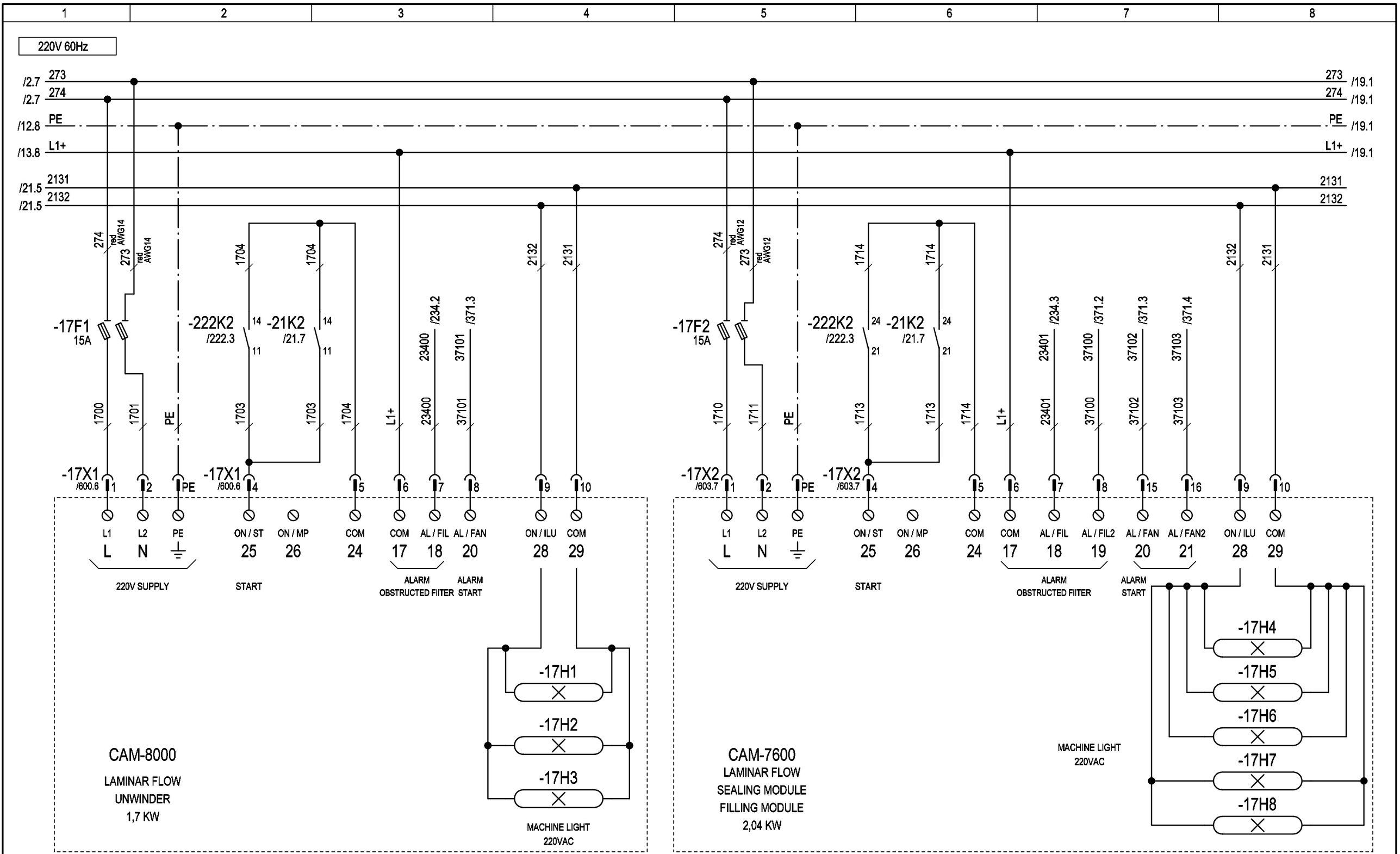

3				Date	\Z72	NURTURE, INC. (USA)	ACMAVOLPAK	TYPE OF MACHINE: SM-360 F4 WD	LAMINAR FLOW MACHINE	=
2				Draw.	A.LLEONART			PROJECT Nº: 24981A		+
1	DIN			Print.	22.07.2014					Sheet 17
	Modification	Date	Name	Norm	DIN	Nº ORDER 13.025		\Z69		Next 19

PATH: 24981A/Diagrams/01-Electrical schemes/17

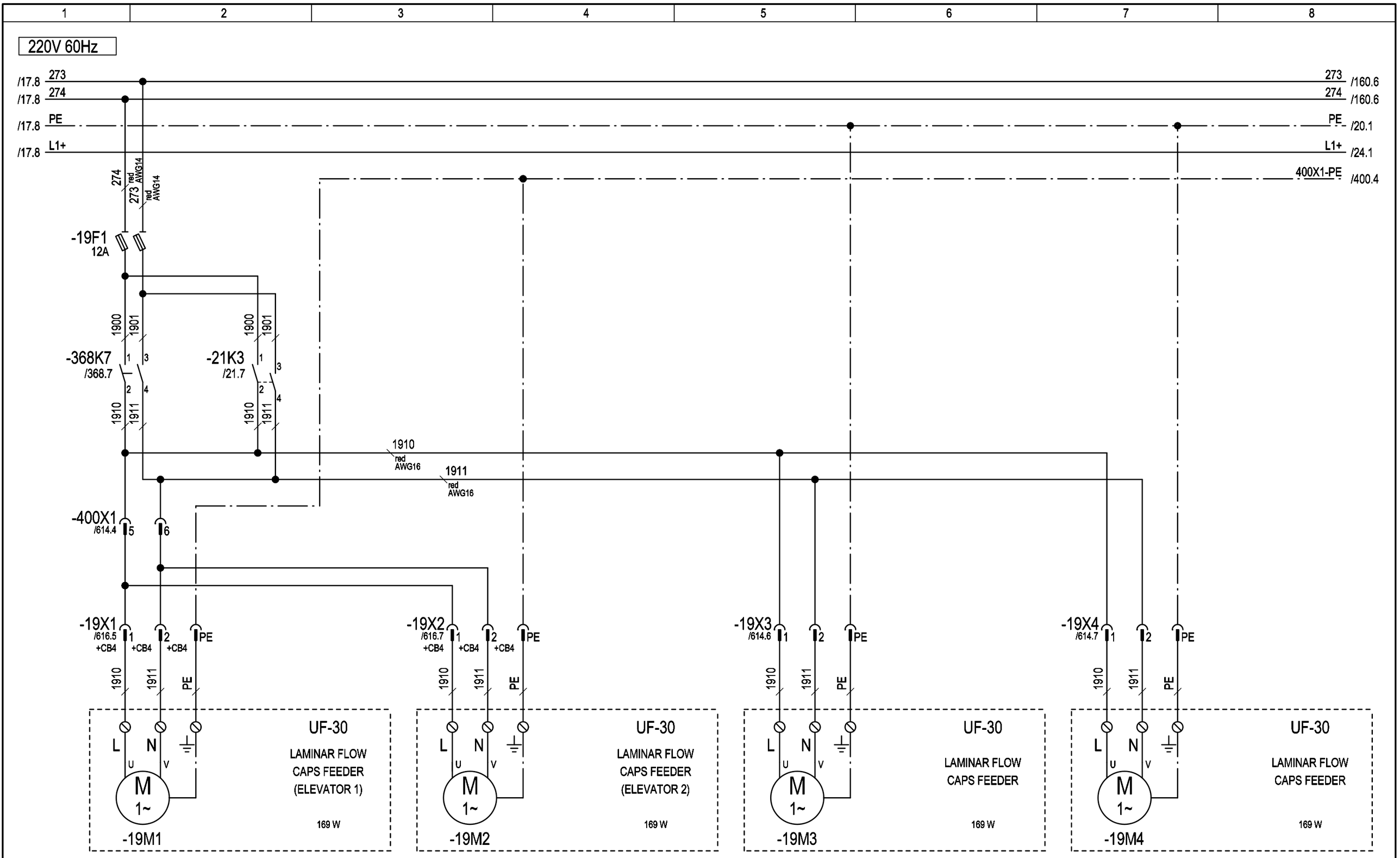

3				Date	\Z72	NURTURE, INC. (USA)	ACMAVOLPAK	TYPE OF MACHINE: SM-360 F4 WD	LAMINAR FLOW CAPS FEEDER	=
2				Draw.	A.LLEONART			PROJECT Nº: 24981A		+
1	DIN			Print.	22.07.2014					Sheet 19
	Modification	Date	Name	Norm	DIN	Nº ORDER 13.025		\Z69		Next 20

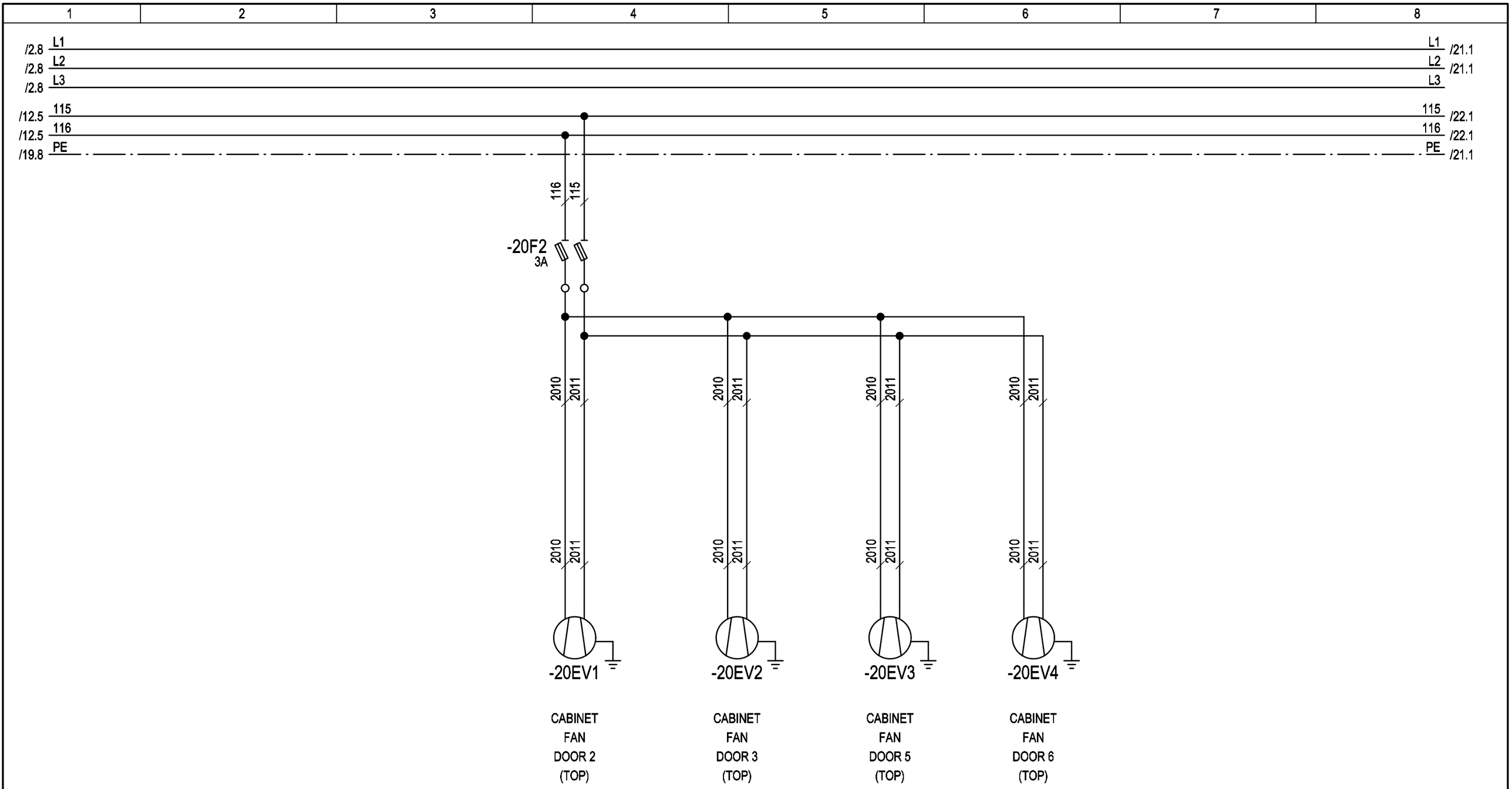

3				Date	\Z72	NURTURE, INC. (USA)	ACMAVOLPAK	TYPE OF MACHINE: SM-360 F4 WD	COOLING	=
2				Draw.	A.LLEONART			PROJECT Nº: 24981A		+
1	DIN			Print.	22.07.2014					Sheet 20
	Modification	Date	Name	Norm	DIN	Nº ORDER 13.025		\Z69		Next 21

PATH: 24981A/Diagrams/01-Electrical schemes/20

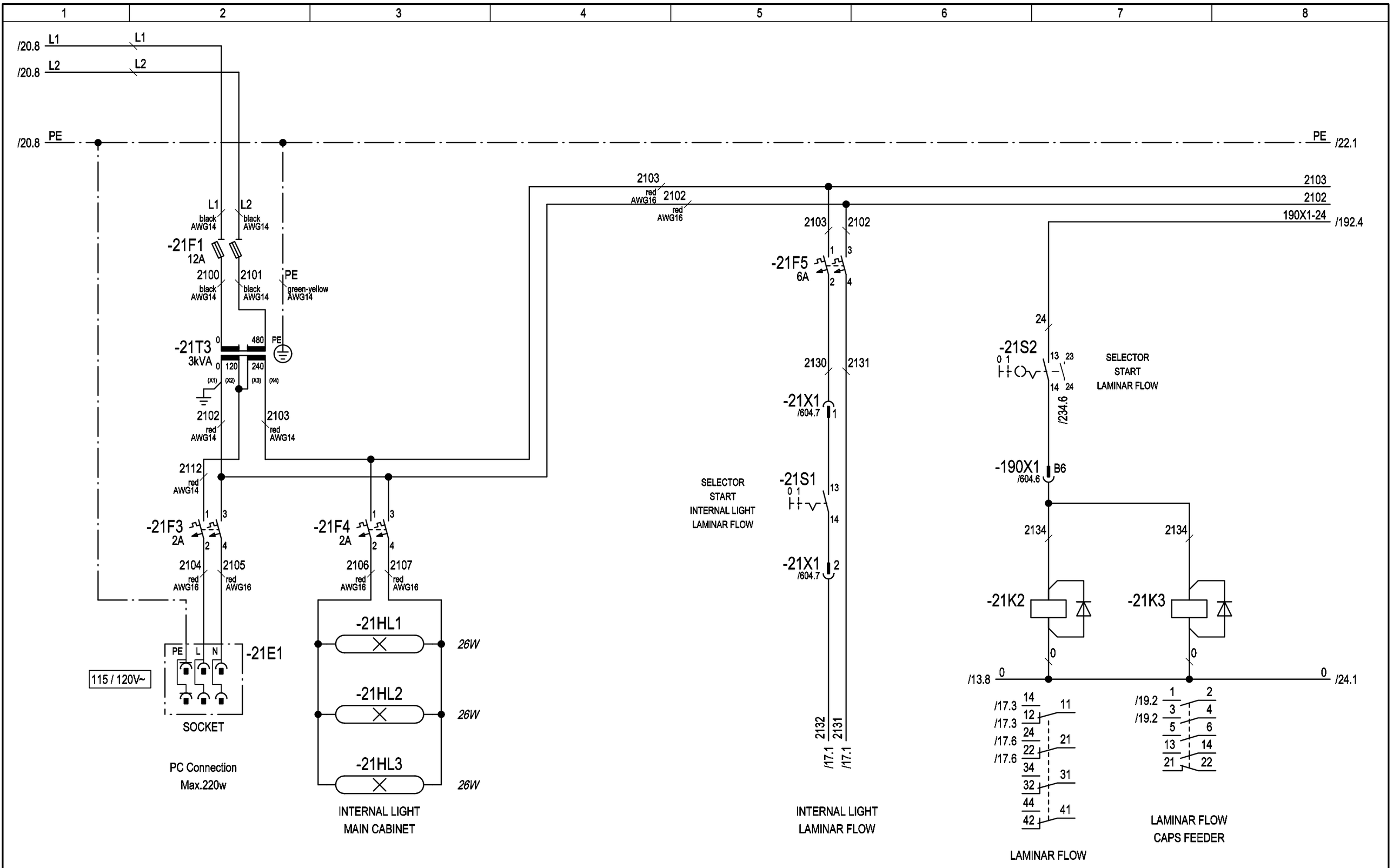

3				Date	\Z72	NURTURE, INC. (USA)	ACMAVOLPAK	TYPE OF MACHINE: SM-360 F4 WD	LAMINAR FLOW
2				Draw.	A.LLEONART			PROJECT Nº: 24981A	
1	DIN			Print.	22.07.2014				
	Modification	Date	Name	Norm	DIN	Nº ORDER 13.025		\Z69	

=
+
Sheet 21
Next 22

PATH: 24981A/Diagrams/01-Electrical schemes/21

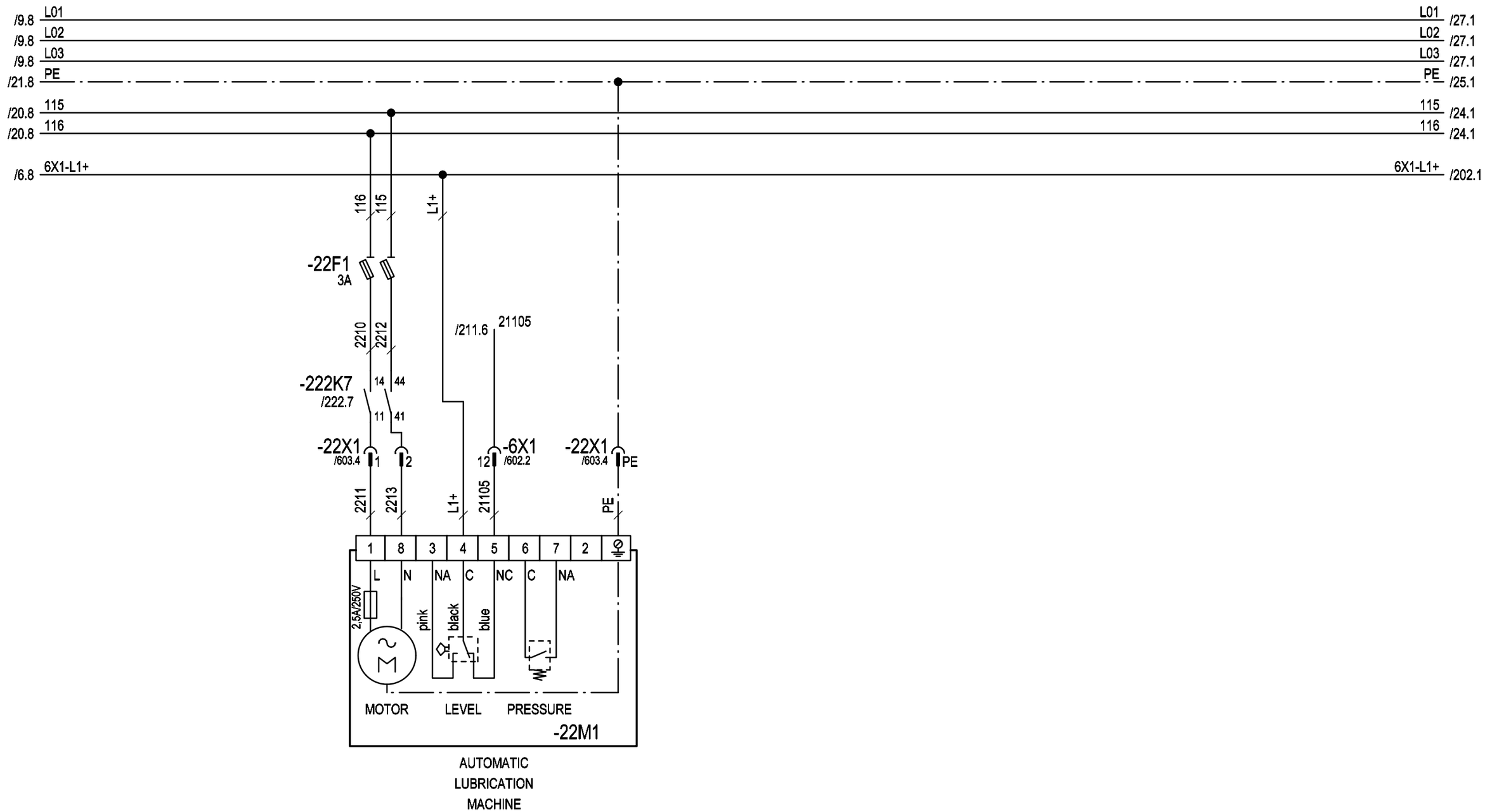

AUTOMATIC
LUBRICATION
MACHINE

3				Date	\Z72	NURTURE, INC. (USA)	ACMAVOLPAK	TYPE OF MACHINE: SM-360 F4 WD	AUTOMATIC LUBRICATION	=
2				Draw.	A.LLEONART			PROJECT Nº: 24981A		+
1	DIN			Print.	22.07.2014					Sheet 22
	Modification	Date	Name	Norm	DIN	Nº ORDER 13.025		\Z69		Next 24

PATH: 24981A/Diagrams/01-Electrical schemes/22

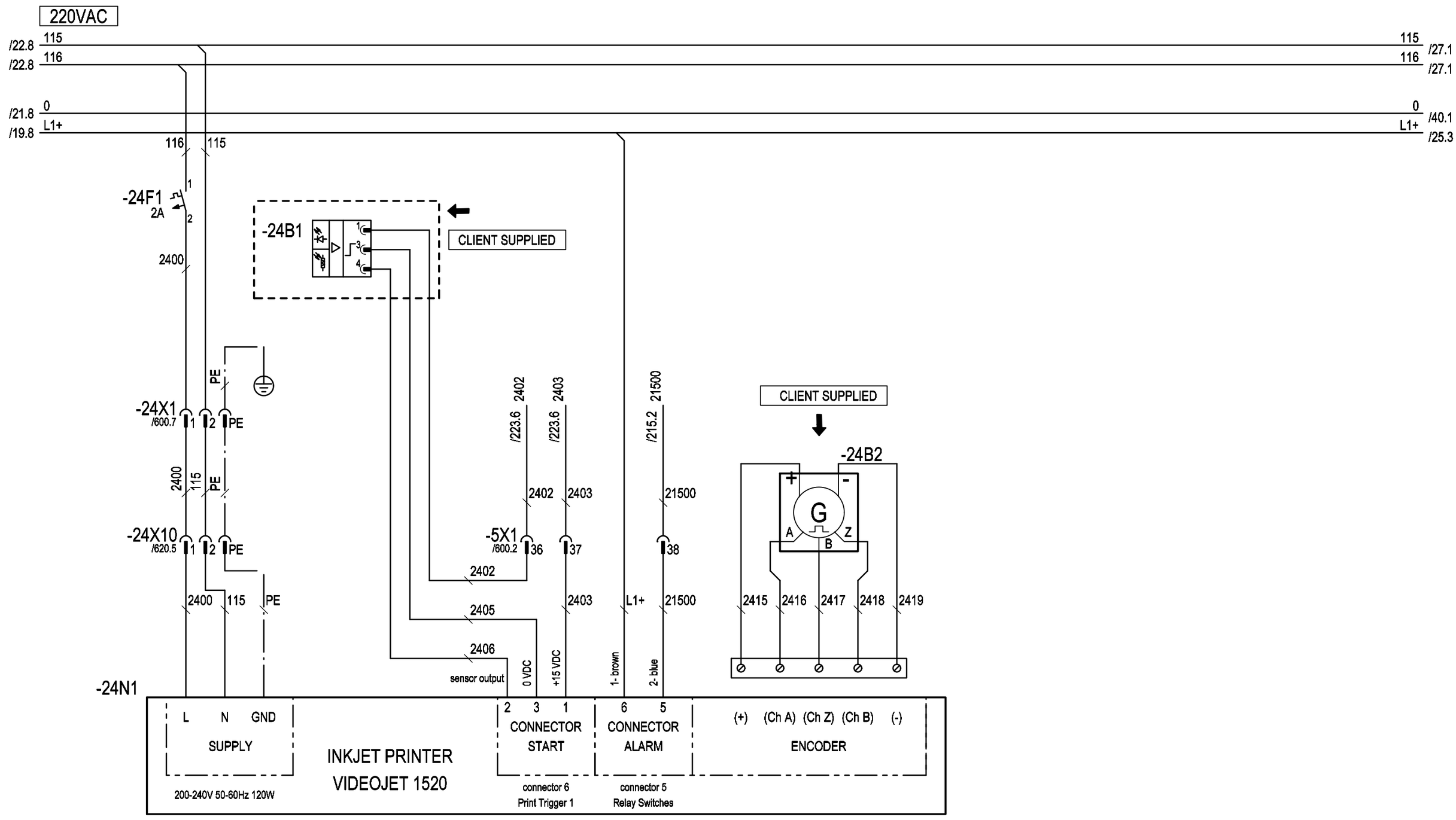

3				Date	\Z72	NURTURE, INC. (USA)	ACMAVOLPAK	TYPE OF MACHINE: SM-360 F4 WD	CODER	=
2				Draw.	A.LLEONART			PROJECT Nº: 24981A		+
1	DIN			Print.	22.07.2014					Sheet 24
	Modification	Date	Name	Norm	DIN	Nº ORDER 13.025		\Z69		Next 25

PATH: 24981A/Diagrams/01-Electrical schemes/24

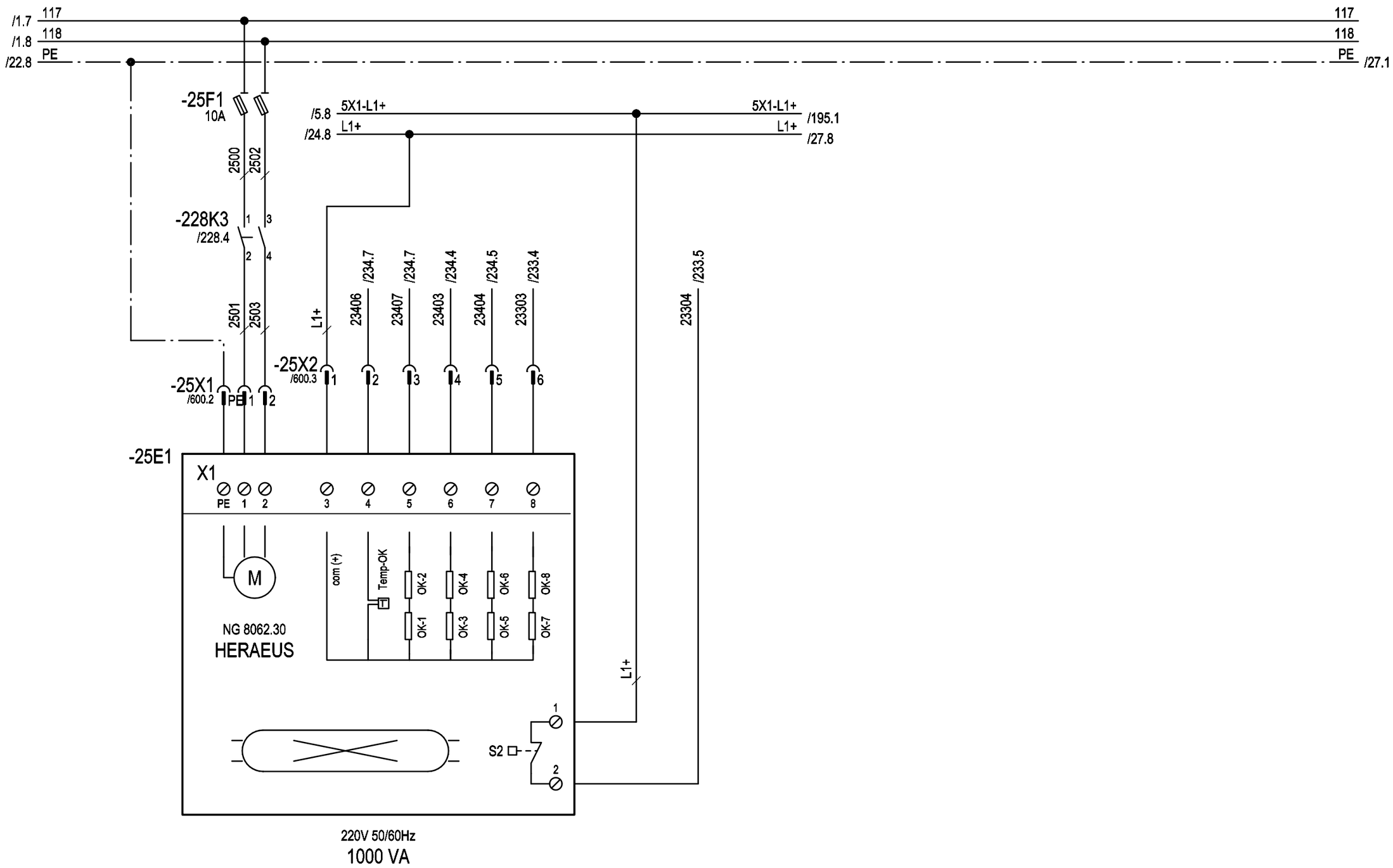

3				Date	\Z72	NURTURE, INC. (USA)	ACMAVOLPAK	TYPE OF MACHINE: SM-360 F4 WD	UV RAYS	=
2				Draw.	A.LLEONART			PROJECT Nº: 24981A		+
1	DIN			Print.	22.07.2014					Sheet 25
	Modification	Date	Name	Norm	DIN	Nº ORDER 13.025		\Z69		Next 27

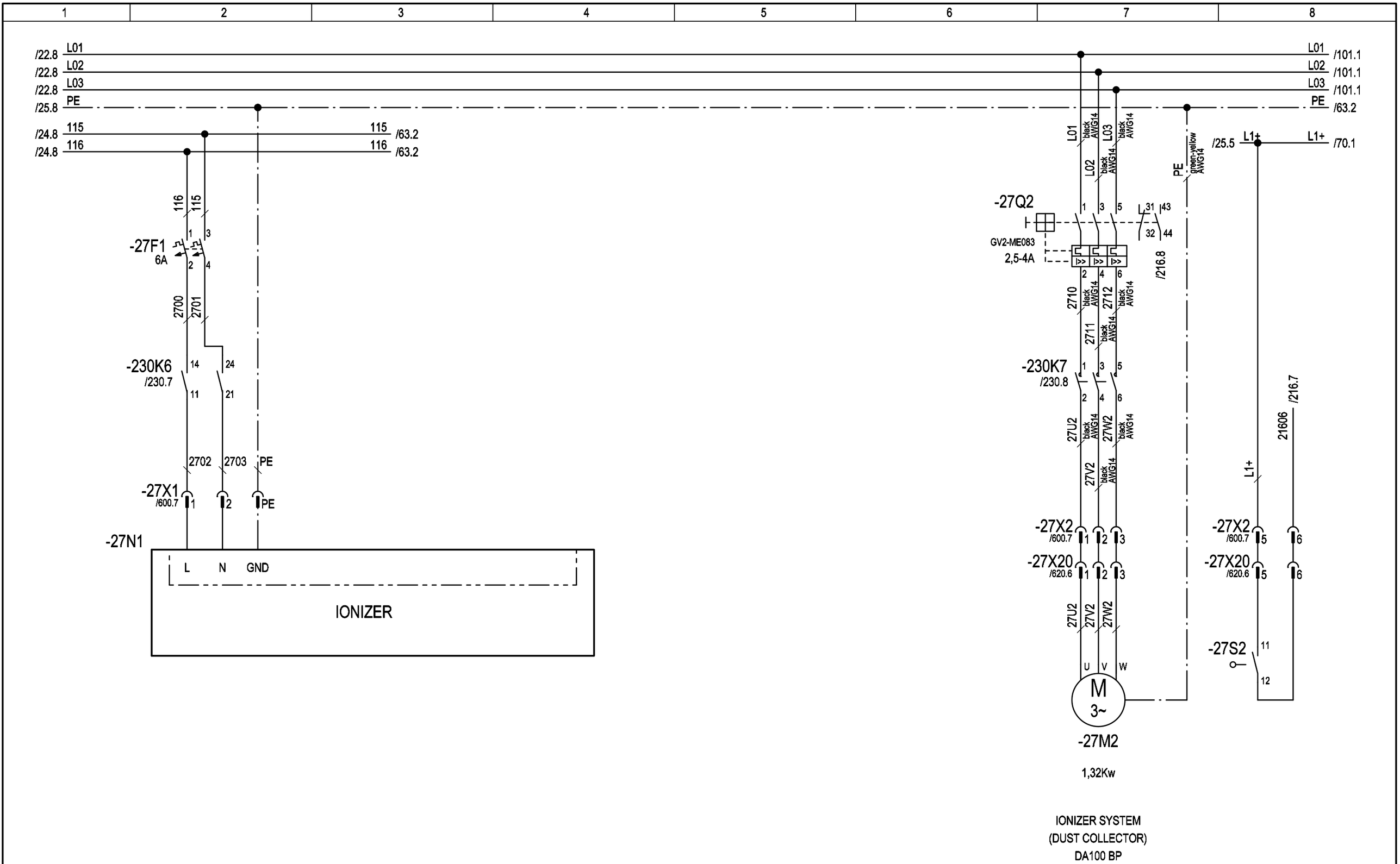

3				Date	\Z72	NURTURE, INC.	ACMAVOLPAK	TYPE OF MACHINE: SM-360 F4 WD	IONIZER SYSTEM	=
2				Draw.	A.LLEONART	(USA)		PROJECT Nº: 24981A		+
1	DIN			Print.	22.07.2014					Sheet 27
	Modification	Date	Name	Norm	DIN	Nº ORDER 13.025		\Z69		Next 40

PATH: 24981A/Diagrams/01-Electrical schemes/27

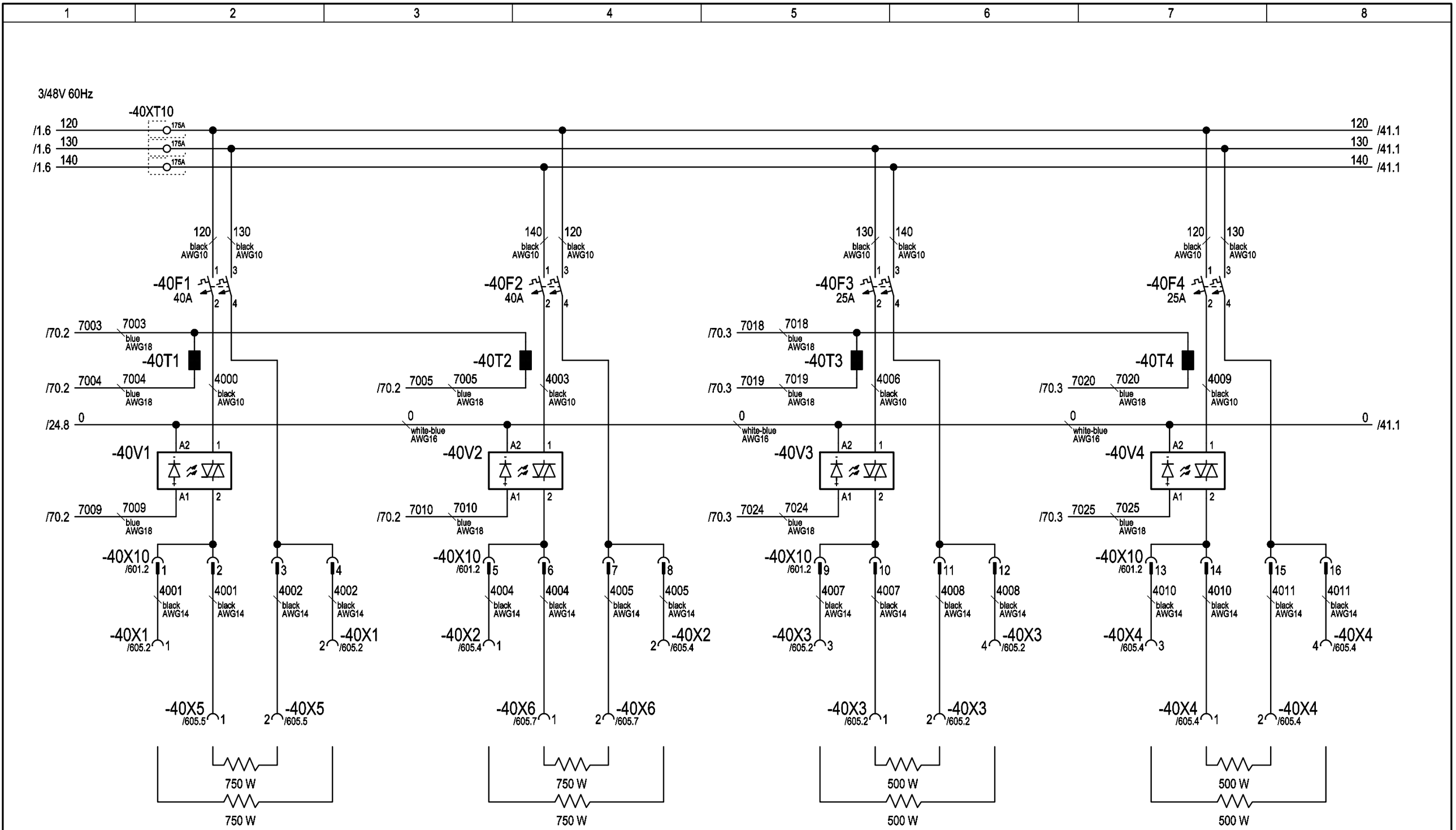

3				Date	\Z72	NURTURE, INC. (USA)	ACMAVOLPAK	TYPE OF MACHINE: SM-360 F4 WD	SEALING HEATERS	=
2				Draw.	A.LLEONART			PROJECT Nº: 24981A		+
1	DIN			Print.	22.07.2014					Sheet 40
	Modification	Date	Name	Norm	DIN	Nº ORDER 13.025		\Z69		Next 41

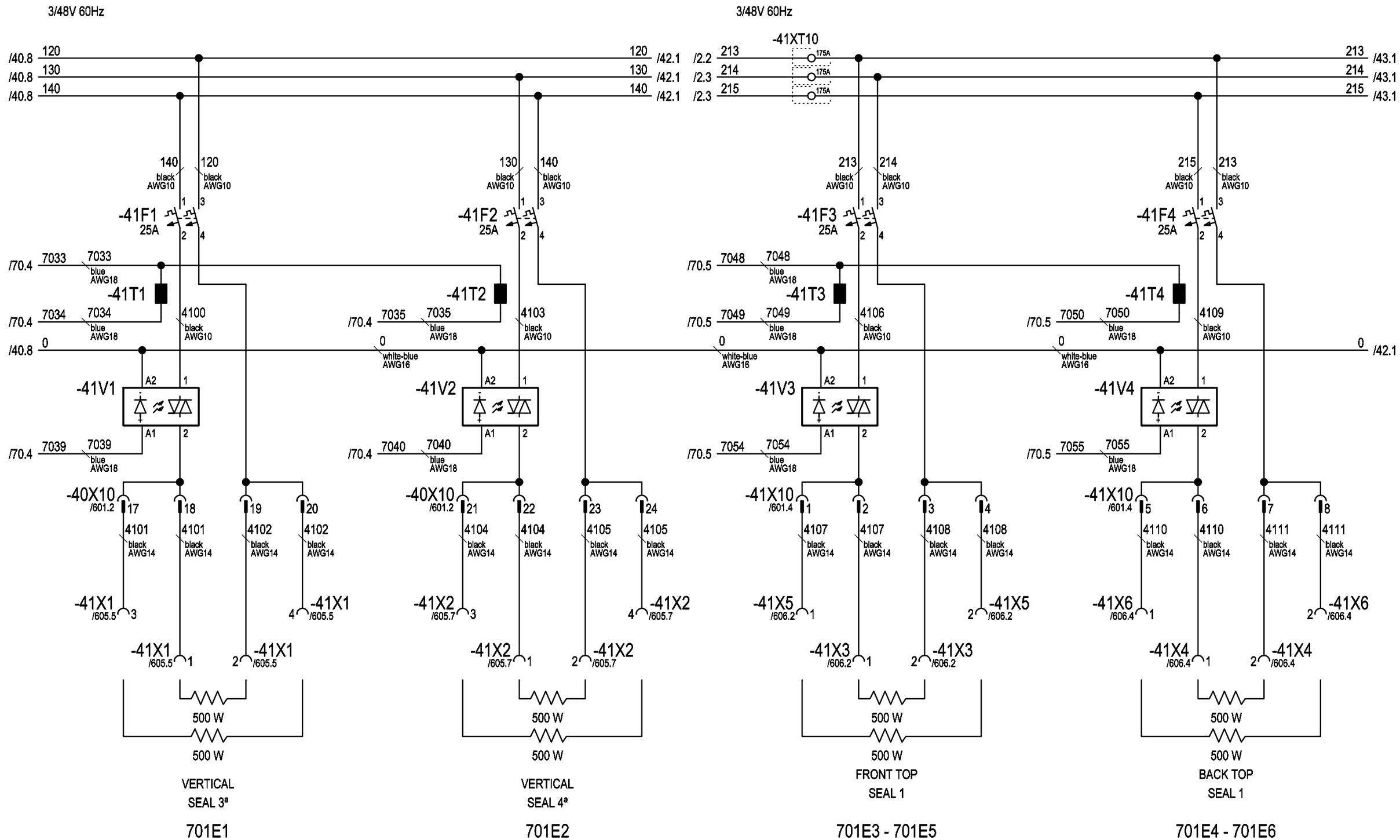

3				Date	\Z72	NURTURE, INC. (USA)	ACMAVOLPAK	TYPE OF MACHINE: SM-360 F4 WD	SEALING HEATERS	=
2				Draw.	A.LLEONART			PROJECT Nº: 24981A		+
1	DIN			Print.	22.07.2014					Sheet 41
	Modification	Date	Name	Norm	DIN	Nº ORDER 13.025		\Z69		Next 42

PATH: 24981A/Diagrams/01-Electrical schemes/41

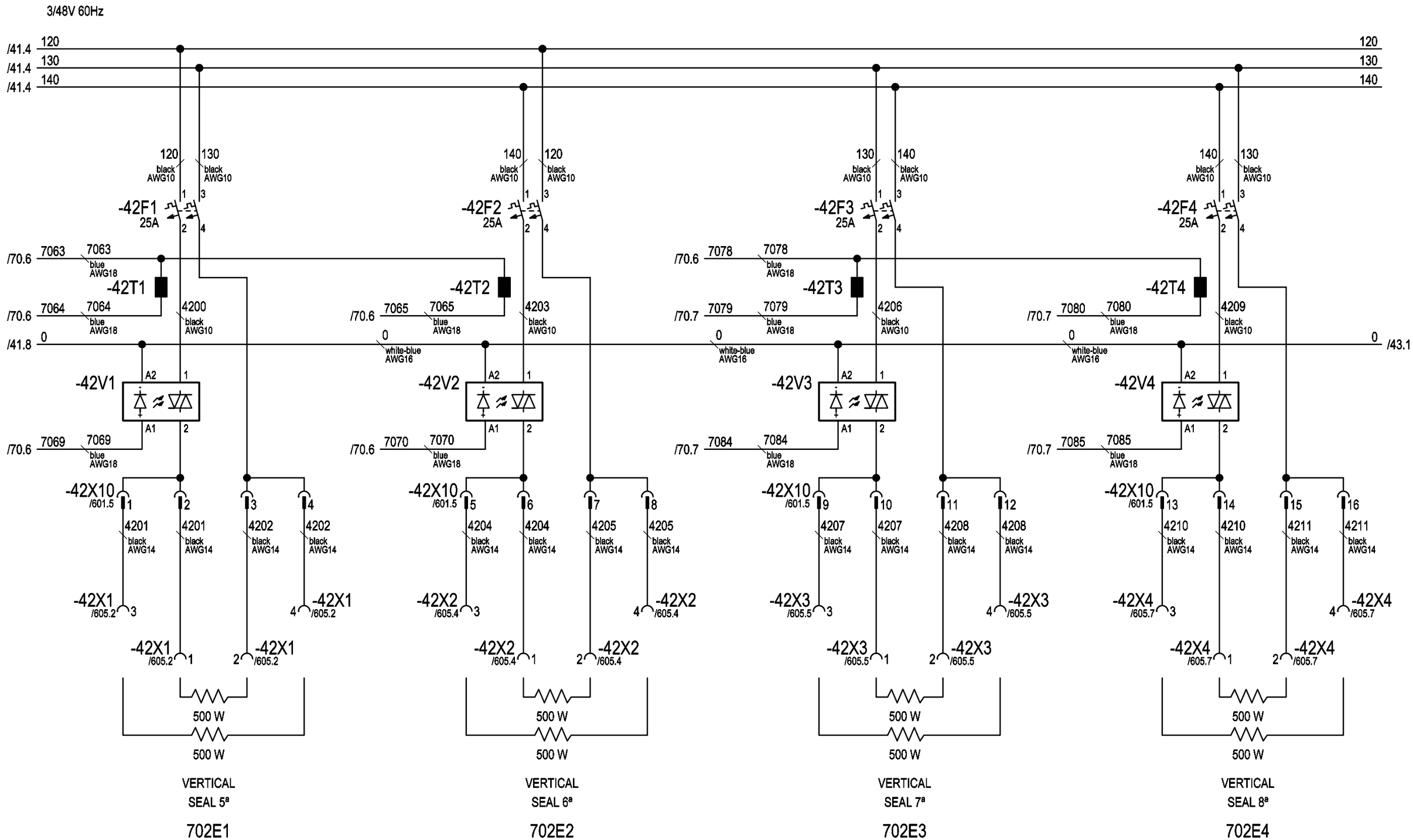

3				Date	\Z72	NURTURE, INC. (USA)	ACMAVOLPAK	TYPE OF MACHINE: SM-360 F4 WD	SEALING HEATERS	=
2				Draw.	A.LLEONART			PROJECT Nº: 24981A		+
1	DIN			Print.	22.07.2014					Sheet 42
	Modification	Date	Name	Norm	DIN	Nº ORDER 13.025		\Z69		Next 43

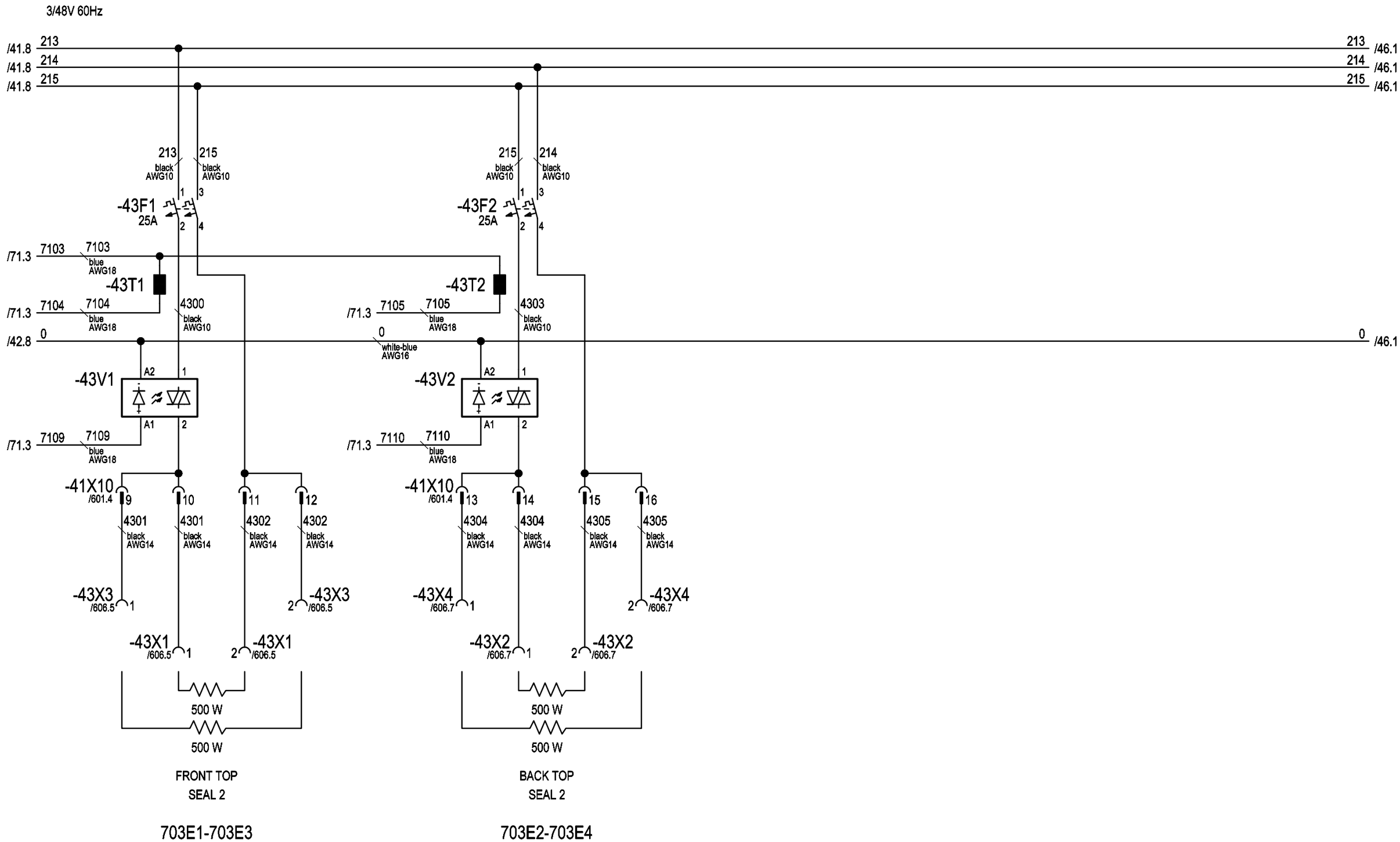

3				Date	\Z72	NURTURE, INC. (USA)	ACMAVOLPAK	TYPE OF MACHINE: SM-360 F4 WD	SEALING HEATERS	=
2				Draw.	A.LLEONART			PROJECT Nº: 24981A		+
1	DIN			Print.	22.07.2014					Sheet 43
	Modification	Date	Name	Norm	DIN	Nº ORDER 13.025		\Z69		Next 46

PATH: 24981A/Diagrams/01-Electrical schemes/43

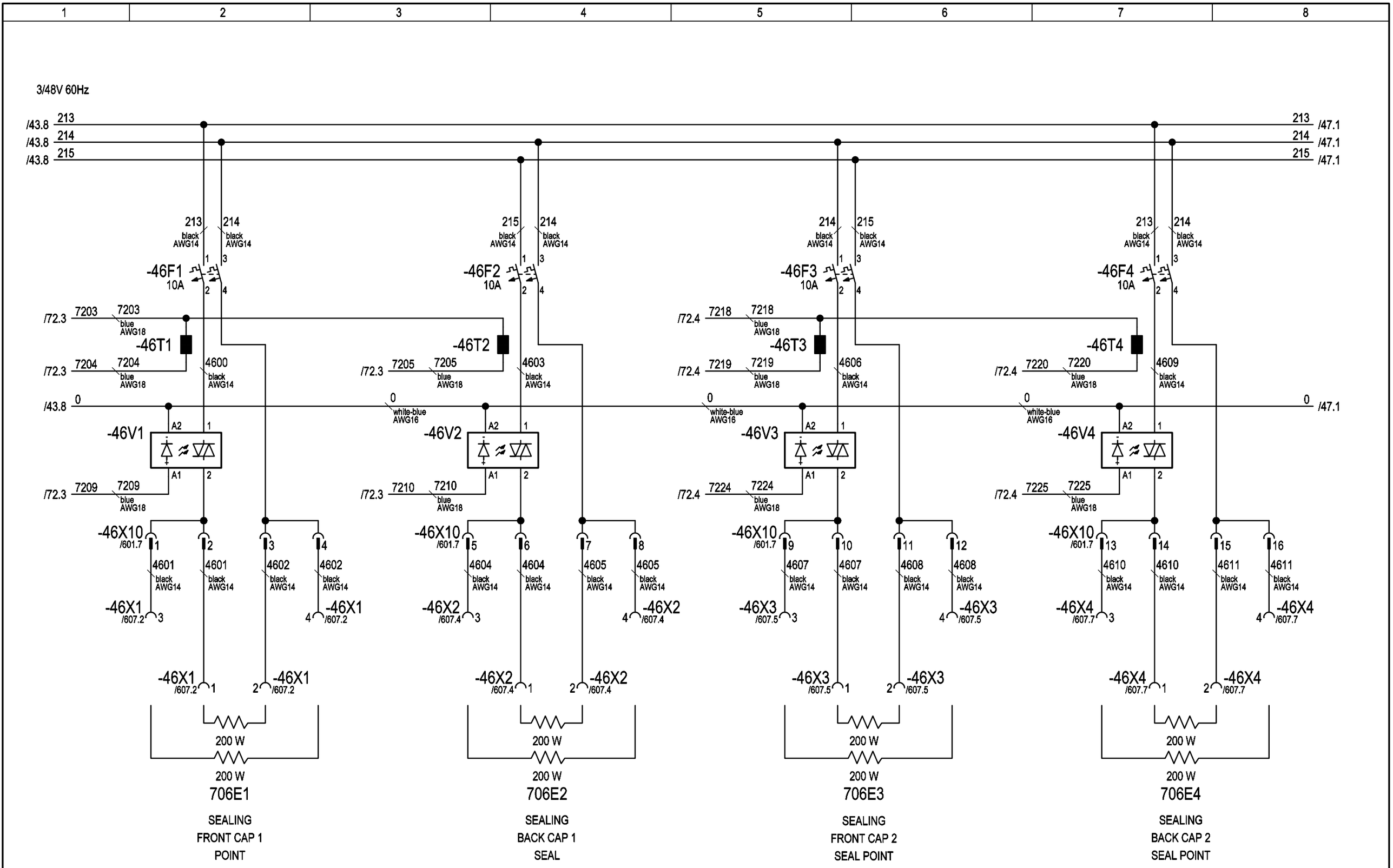

3				Date	\Z72	NURTURE, INC. (USA)	ACMAVOLPAK	TYPE OF MACHINE: SM-360 F4 WD	HEATING CAPS TOP	=
2				Draw.	A.LLEONART			PROJECT Nº: 24981A		+
1	DIN			Print.	22.07.2014					Sheet 46
	Modification	Date	Name	Norm	DIN	Nº ORDER 13.025		\Z69		Next 47

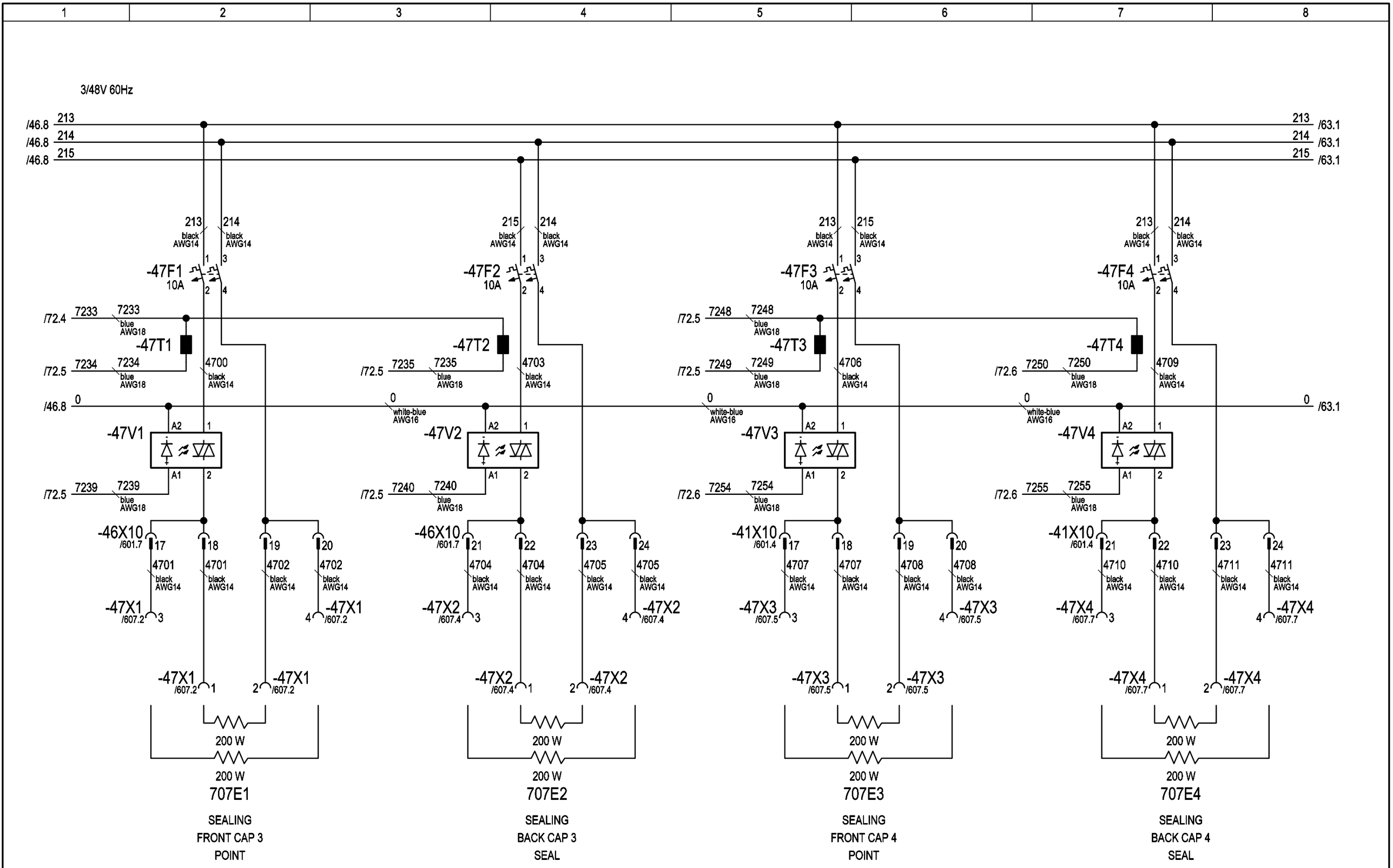

3				Date	\Z72	NURTURE, INC. (USA)	ACMAVOLPAK	TYPE OF MACHINE: SM-360 F4 WD	HEATING CAPS TOP	=
2				Draw.	A.LLEONART			PROJECT Nº: 24981A		+
1	DIN			Print.	22.07.2014					Sheet 47
	Modification	Date	Name	Norm	DIN	Nº ORDER 13.025		\Z69		Next 63

PATH: 24981A/Diagrams/01-Electrical schemes/47

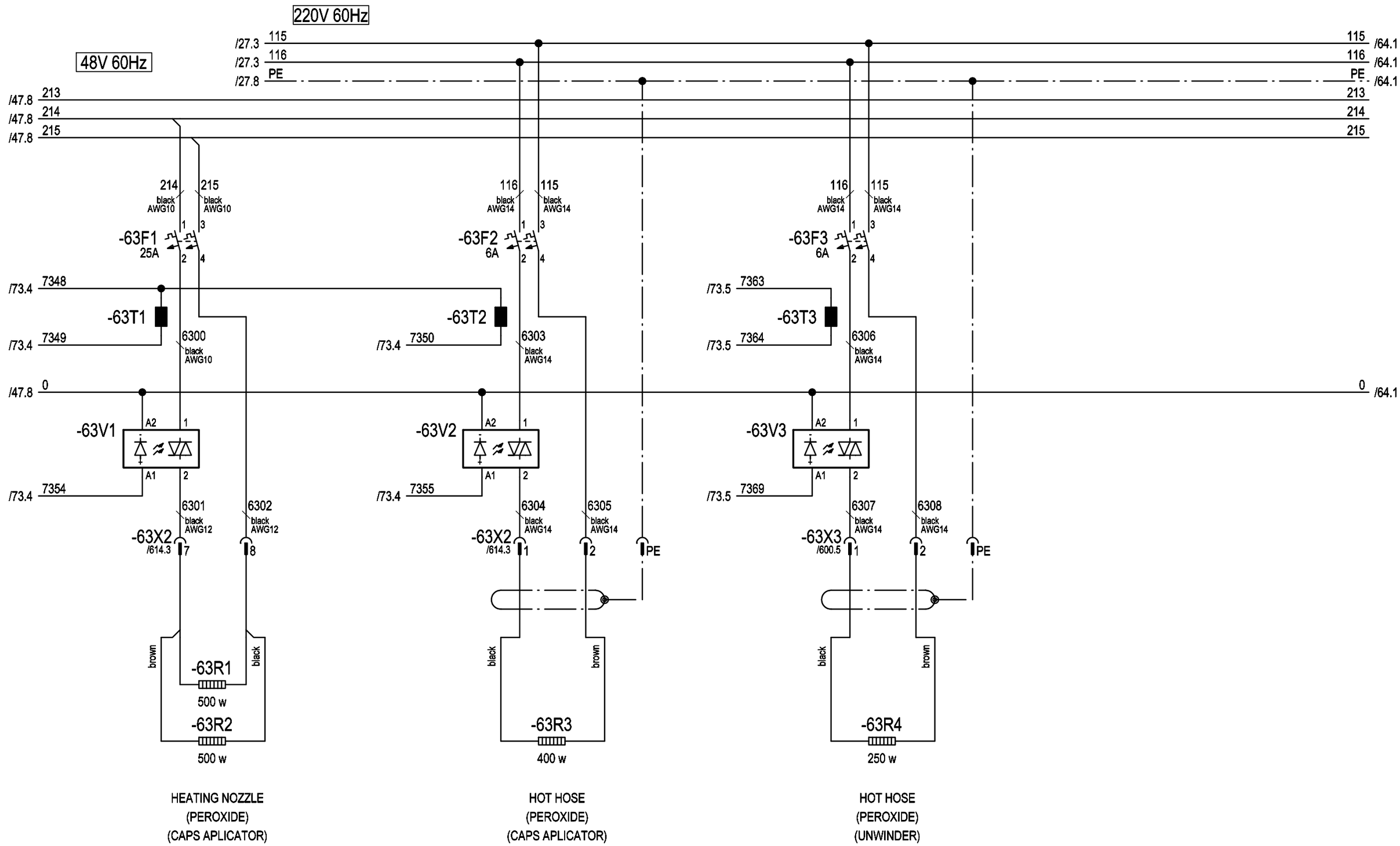

3				Date	\Z72	NURTURE, INC. (USA)	ACMAVOLPAK	TYPE OF MACHINE: SM-360 F4 WD	HEATING (PEROXIDE)	=
2				Draw.	A.LLEONART			PROJECT Nº: 24981A		+
1	DIN			Print.	22.07.2014					Sheet 63
	Modification	Date	Name	Norm	DIN	Nº ORDER 13.025		\Z69		Next 64

PATH: 24981A/Diagrams/01-Electrical schemes/63

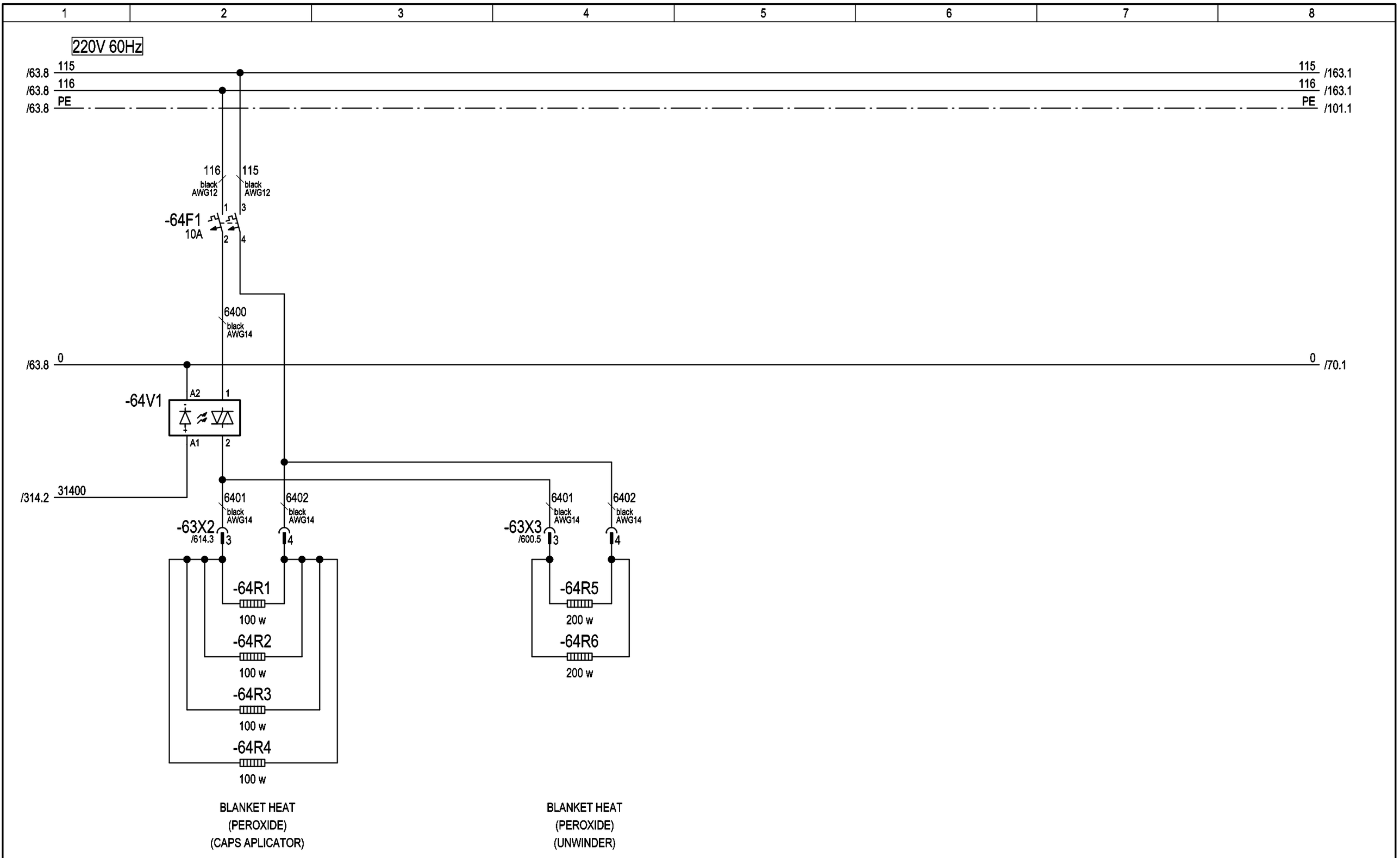

3				Date	\Z72	NURTURE, INC. (USA)	ACMAVOLPAK	TYPE OF MACHINE: SM-360 F4 WD	HEATING (PEROXIDE)	=
2				Draw.	A.LLEONART			PROJECT Nº: 24981A		+
1	DIN			Print.	22.07.2014					Sheet 64
	Modification	Date	Name	Norm	DIN	Nº ORDER 13.025		\Z69		Next 70

PATH: 24981A/Diagrams/01-Electrical schemes/64

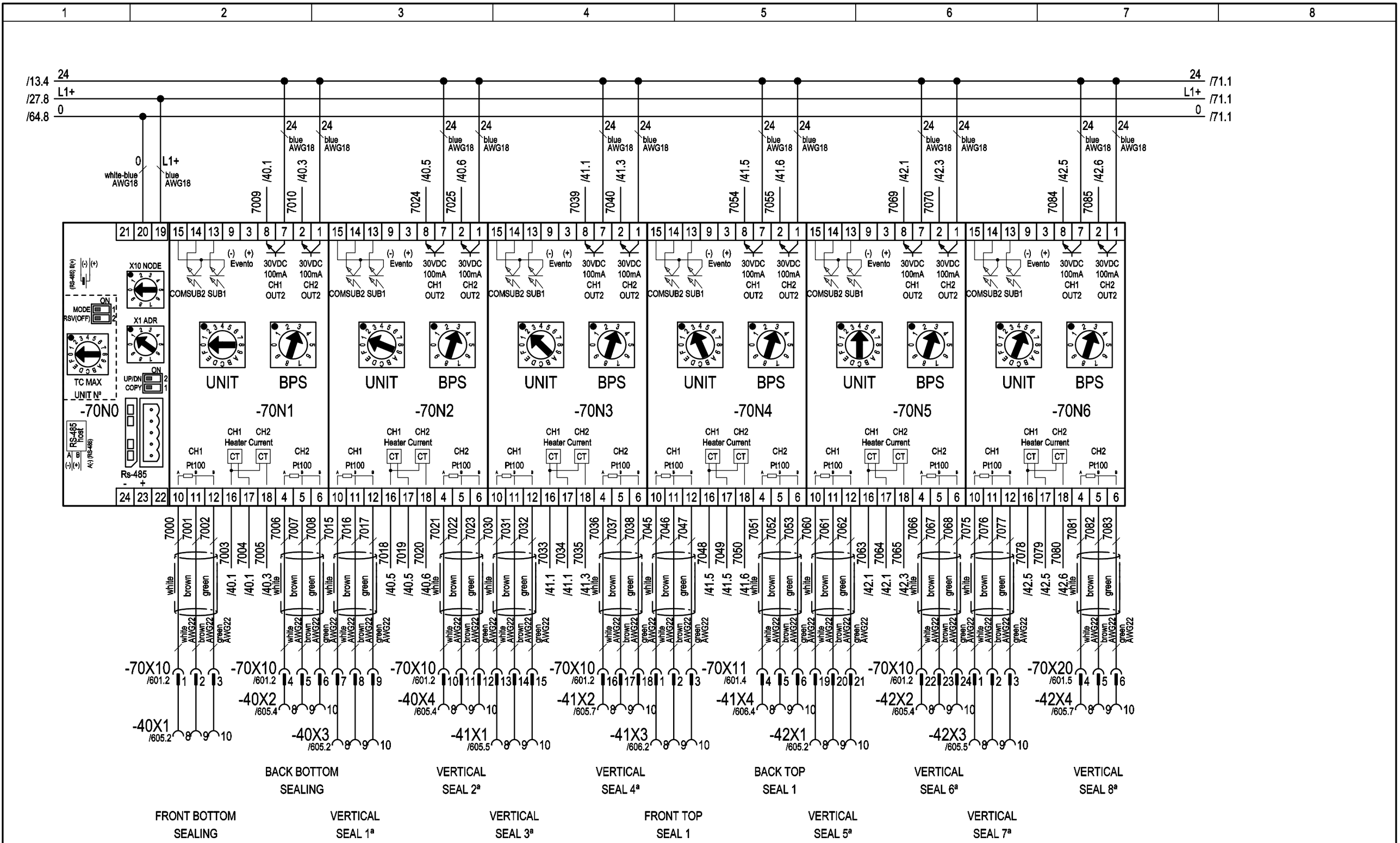

3				Date	\Z72	NURTURE, INC.	ACMAVOLPAK	TYPE OF MACHINE: SM-360 F4 WD	CONTROL SEALING HEATERS	=
2				Draw.	A.LLEONART	(USA)		PROJECT Nº: 24981A		+
1	DIN			Print.	22.07.2014					Sheet 70
	Modification	Date	Name	Norm	DIN	Nº ORDER 13.025		\Z69		Next 71

PATH: 24981A/Diagrams/01-Electrical schemes/70

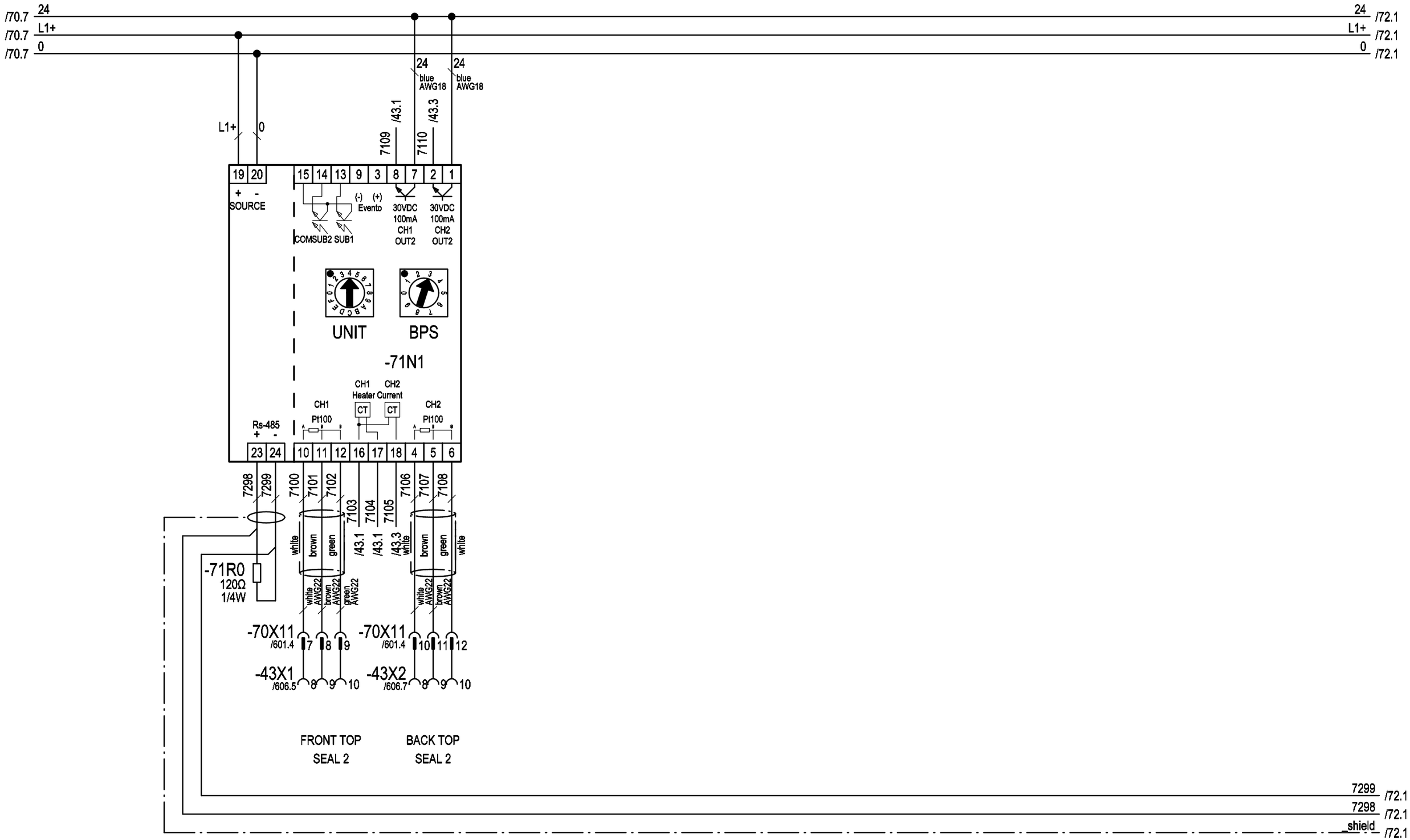

3				Date	\Z72	NURTURE, INC. (USA)	ACMAVOLPAK	TYPE OF MACHINE: SM-360 F4 WD	CONTROL SEALING HEATERS	=
2				Draw.	A.LLEONART			PROJECT Nº: 24981A		+
1	DIN			Print.	22.07.2014					Sheet 71
	Modification	Date	Name	Norm	DIN	Nº ORDER 13.025		\Z69		Next 72

PATH: 24981A/Diagrams/01-Electrical schemes/71

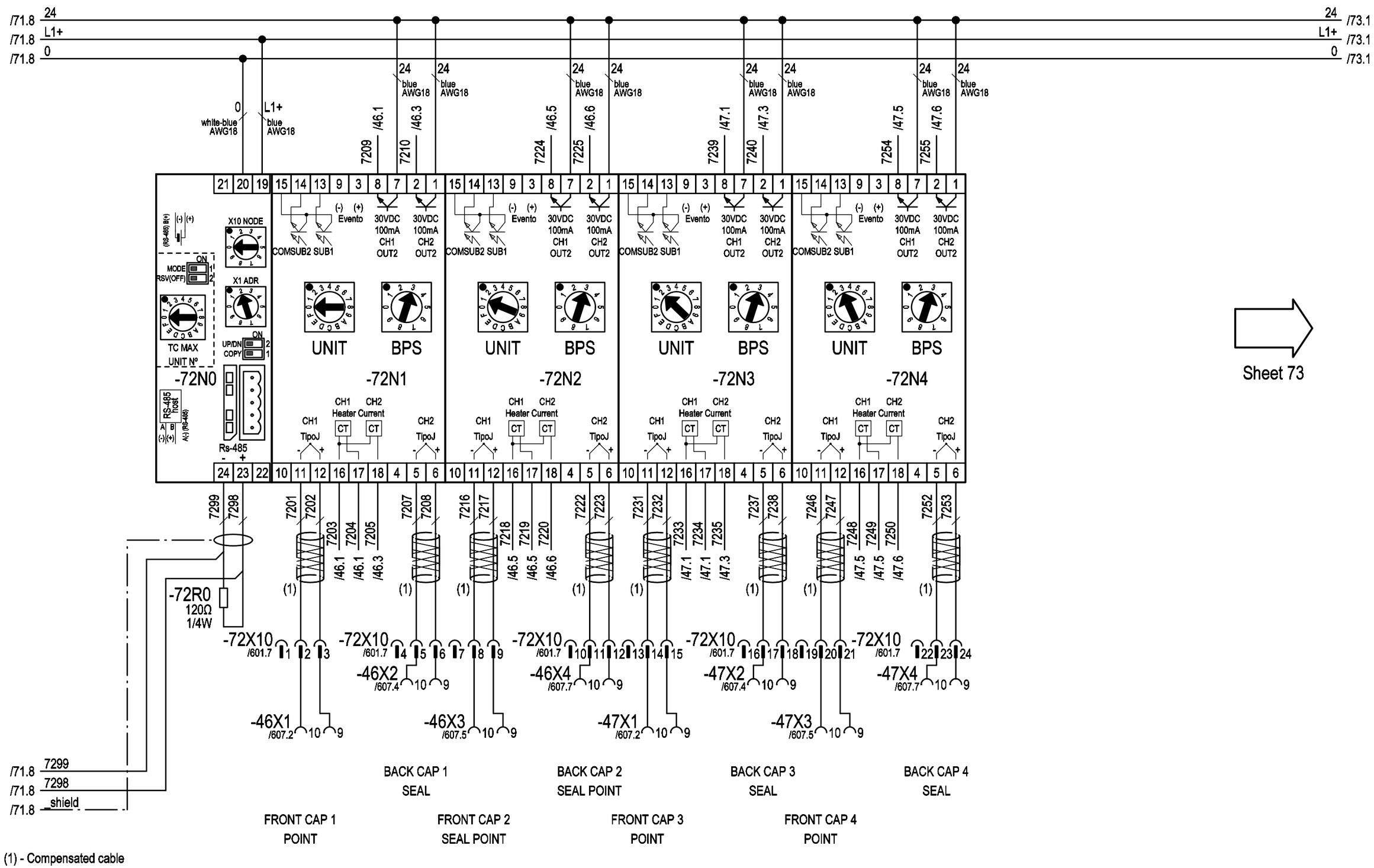

(1) - Compensated cable

3				Date	\Z72	NURTURE, INC. (USA)	ACMAVOLPAK	TYPE OF MACHINE: SM-360 F4 WD	CONTROL HEATING CAPS TOP	=	
2				Draw.	A.LLEONART			PROJECT Nº: 24981A		+	
1	DIN			Print.	22.07.2014					Sheet 72	
	Modification	Date	Name	Norm	DIN	Nº ORDER 13.025		\Z69		Next 73	

PATH: 24981A/Diagrams/01-Electrical schemes/72

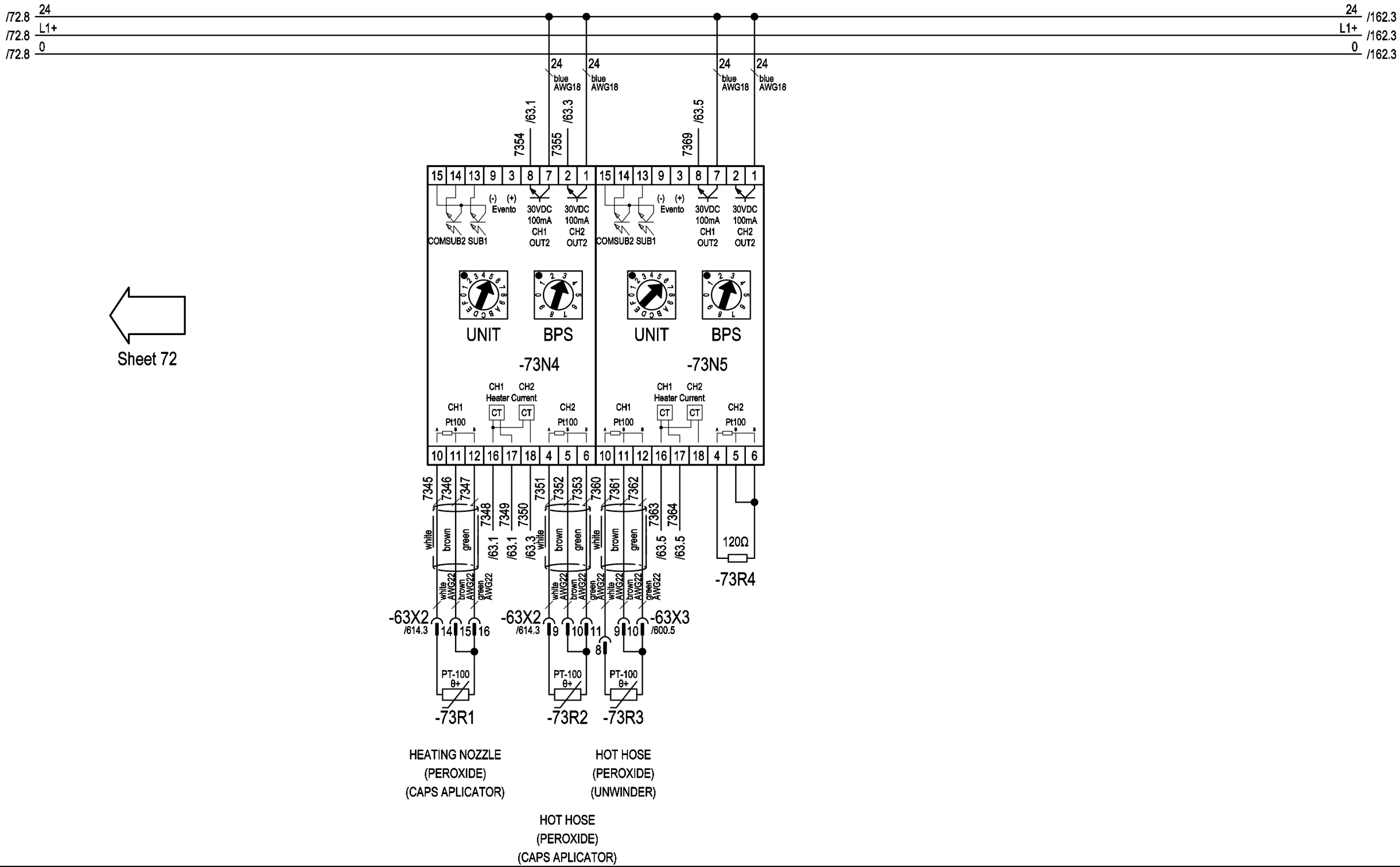

3				Date	\Z72	NURTURE, INC. (USA)	ACMAVOLPAK	TYPE OF MACHINE: SM-360 F4 WD	CONTROL HEATING (PEROXIDE)	=
2				Draw.	A.LLEONART			PROJECT Nº: 24981A		+
1	DIN			Print.	22.07.2014					Sheet 73
	Modification	Date	Name	Norm	DIN	Nº ORDER 13.025		\Z69		Next 101

PATH: 24981A/Diagrams/01-Electrical schemes/73

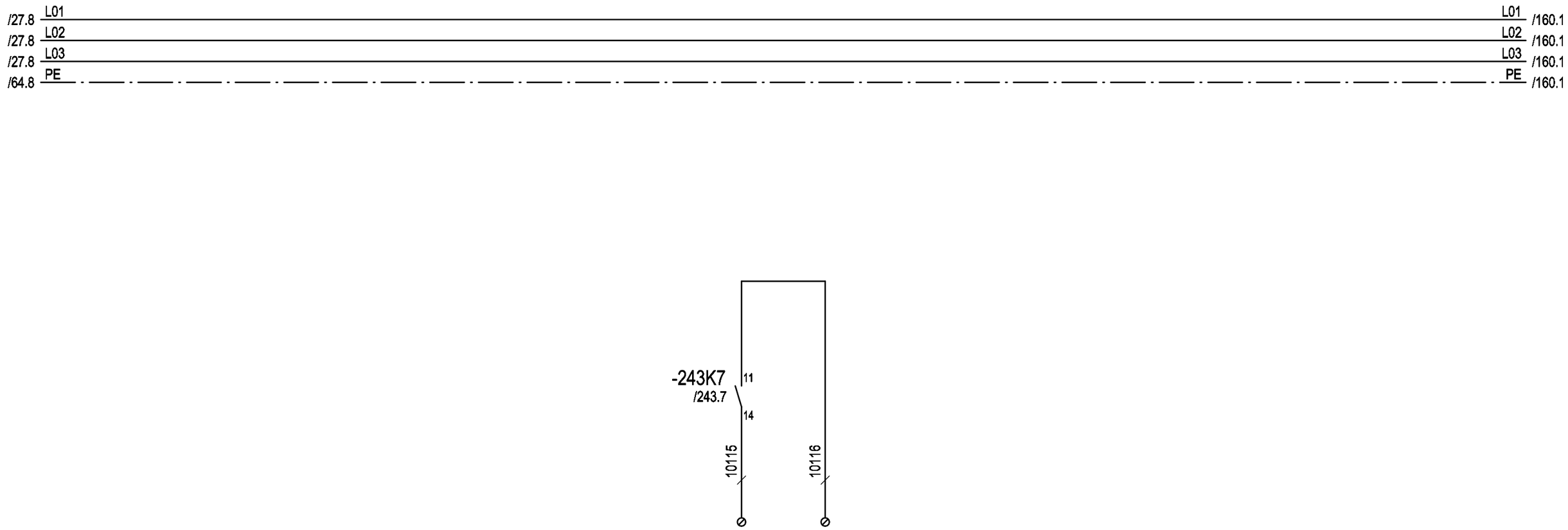

3				Date	\Z72	NURTURE, INC. (USA)	ACMAVOLPAK	TYPE OF MACHINE: SM-360 F4 WD	HOPPER FEEDER	=
2				Draw.	A.LLEONART			PROJECT Nº: 24981A		+
1	DIN			Print.	22.07.2014					Sheet 101
	Modification	Date	Name	Norm	DIN	Nº ORDER 13.025		\Z69		Next 160

PATH: 24981A/Diagrams/01-Electrical schemes/101

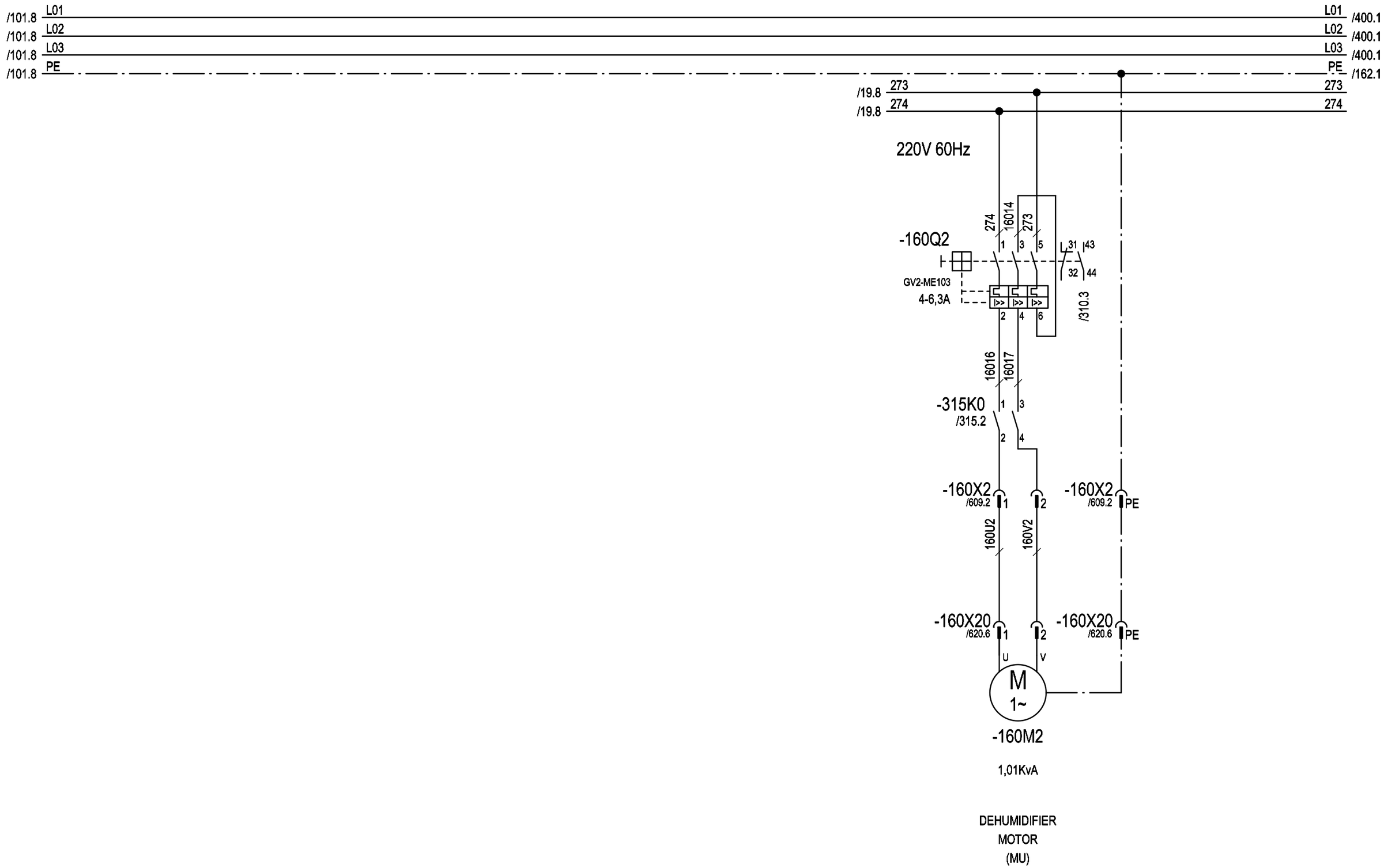

3				Date	\Z72	NURTURE, INC. (USA)	ACMAVOLPAK	TYPE OF MACHINE: SM-360 F4 WD	MOTORS POWER (PEROXIDE -STERIS)	=
2				Draw.	A.LLEONART			PROJECT Nº: 24981A		+
1	DIN			Print.	22.07.2014					Sheet 160
	Modification	Date	Name	Norm	DIN	Nº ORDER 13.025		\Z69		Next 162

PATH: 24981A/Diagrams/01-Electrical schemes/160

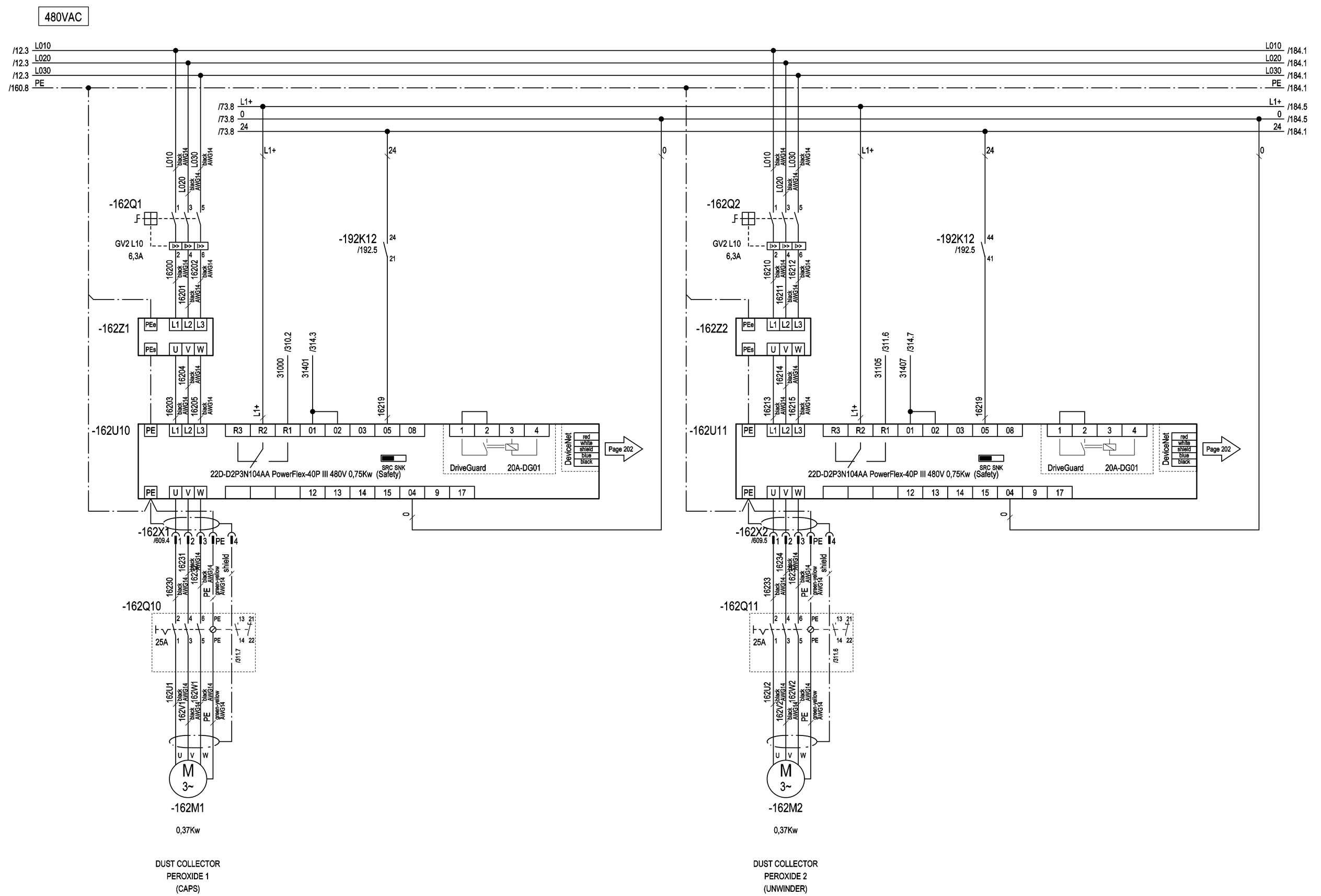

3				Date	22.07.2014
2				Draw.	A.LLEONART
1				Comp.	
	Modification	Date	Name	Norm	DIN

NURTURE, INC.
(USA)

Nº ORDER 13.025

ACMAVOLPAK

TYPE OF MACHINE: SM-360 F4 WD
PROJECT Nº: 24981A
DRAWING Nº

MOTORS POWER
(PEROXIDE)

=
+
Sheet 162
Next 163

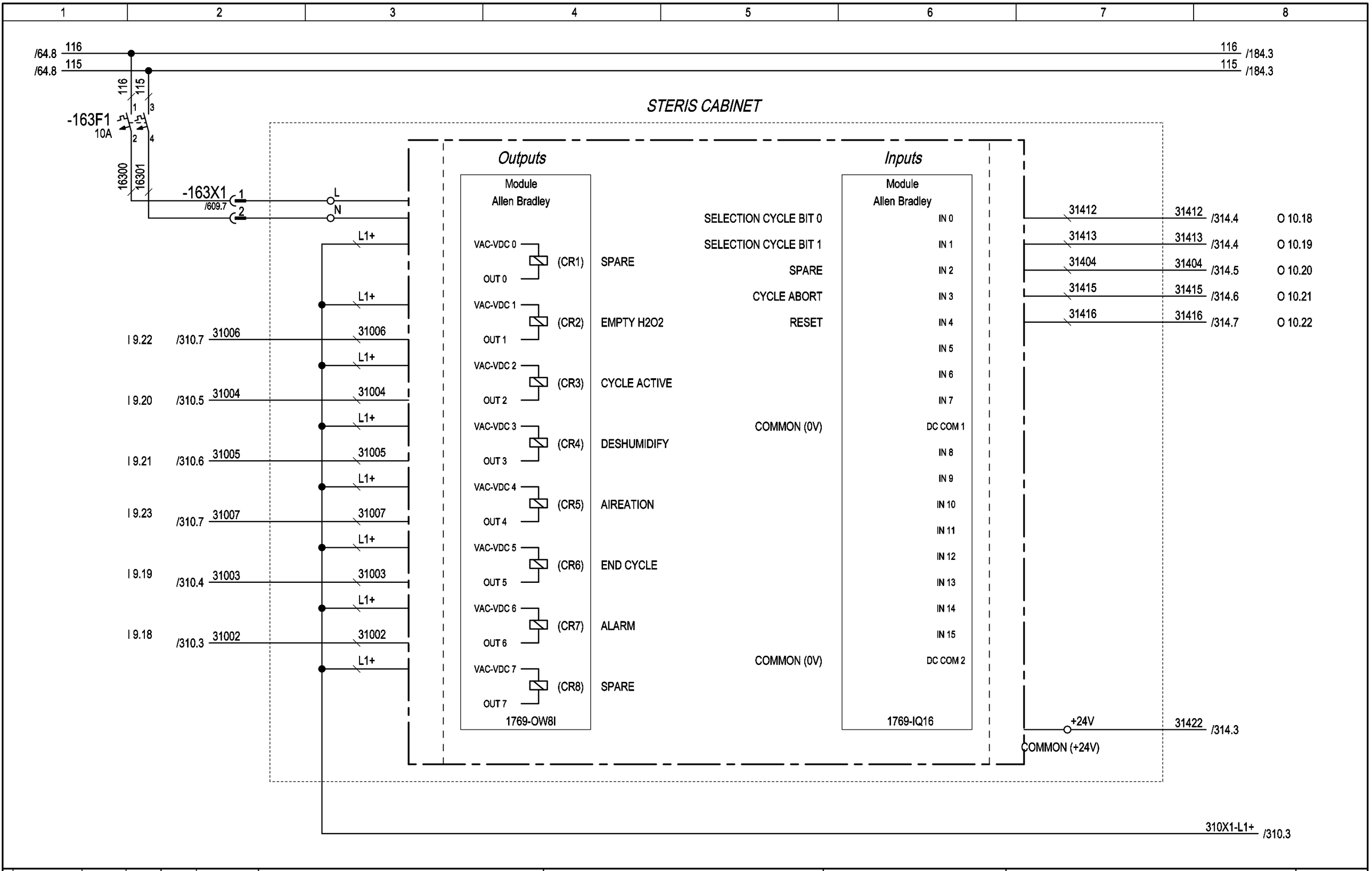

3				Date	\Z72	NURTURE, INC.	ACMAVOLPAK	TYPE OF MACHINE: SM-360 F4 WD	SYNCHRONISM	=
2				Draw.	A.LLEONART	(USA)		PROJECT Nº: 24981A	(STERIS)	+
1	DIN			Print.	22.07.2014					Sheet 163
	Modification	Date	Name	Norm	DIN	Nº ORDER 13.025		\Z69		Next 184

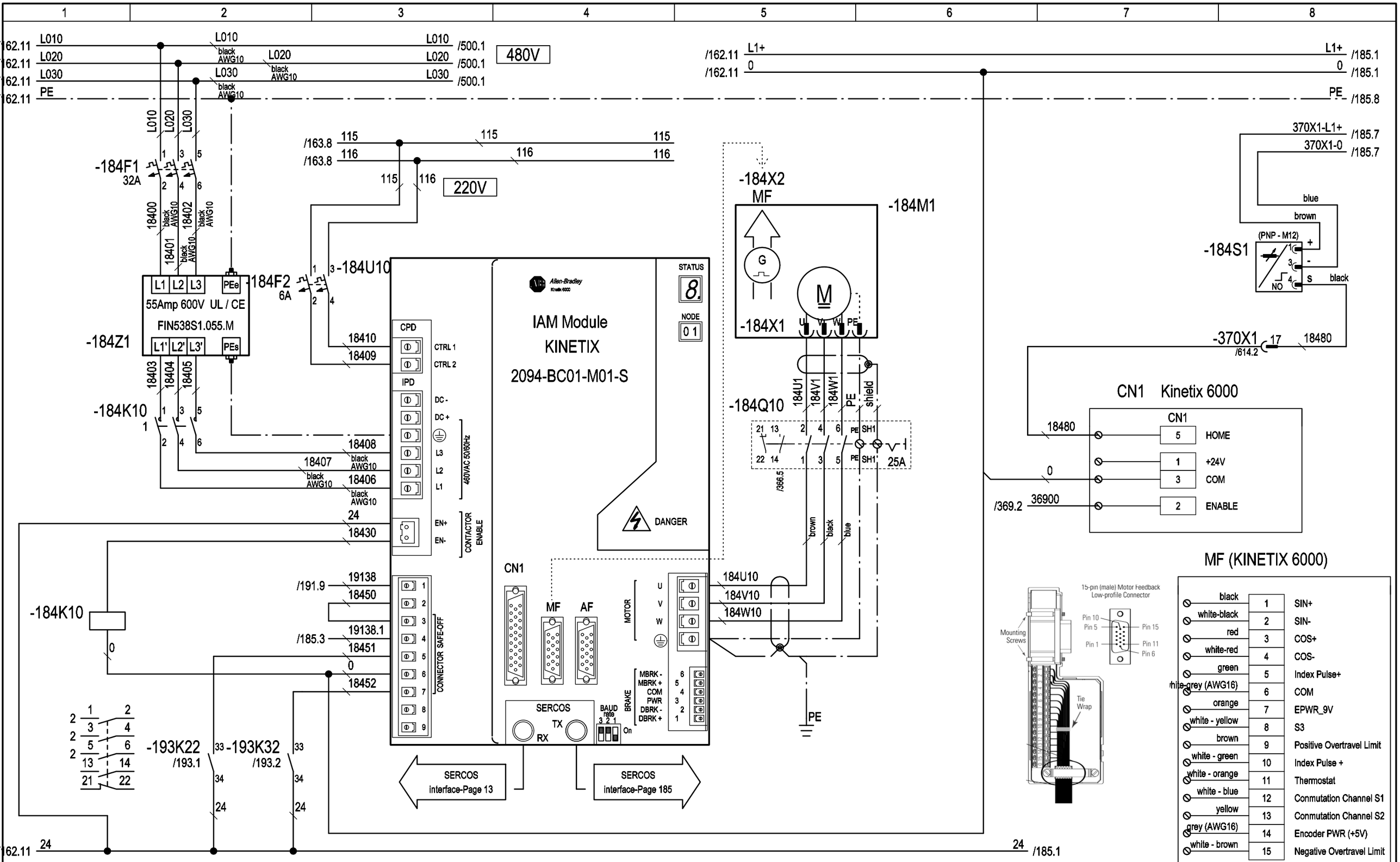

3				Date	\Z72	NURTURE, INC. (USA)	ACMAVOLPAK	TYPE OF MACHINE: SM-360 F4 WD	POWER CAPS APLICATOR 1 (CA-998/4)
2				Draw.	A.LLEONART			PROJECT Nº: 24981A	
1	DIN			Print.	22.07.2014			\Z69	Sheet 184
	Modification	Date	Name	Norm	DIN	Nº ORDER 13.025			Next 185

PATH: 24981A/Diagrams/01-Electrical schemes/184

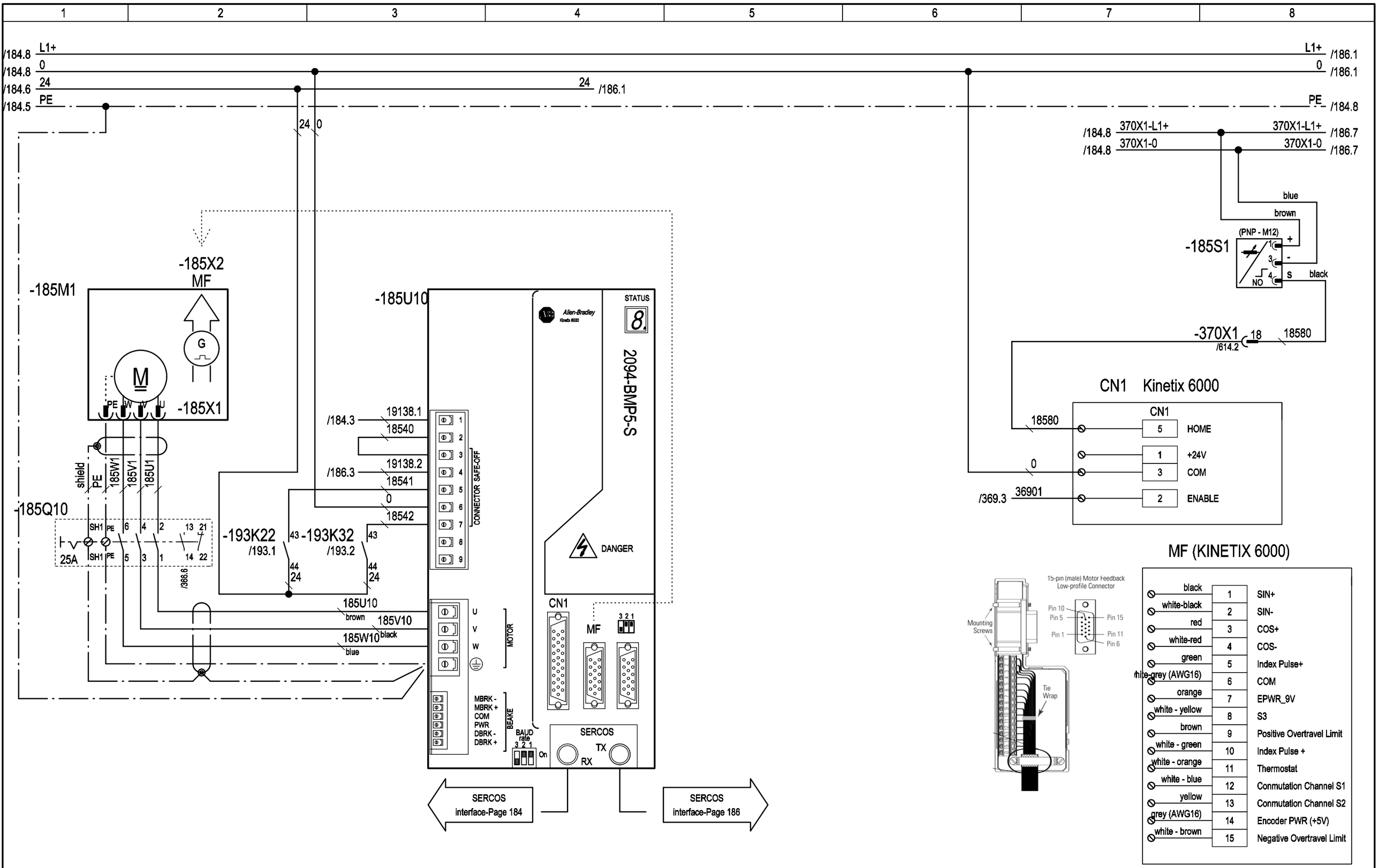

3				Date	\Z72	NURTURE, INC. (USA)	ACMAVOLPAK	TYPE OF MACHINE: SM-360 F4 WD	POWER
2				Draw.	A.LLEONART			PROJECT Nº: 24981A	CAPS APLICATOR 2 (CA-998/4)
1	DIN			Print.	22.07.2014				=
	Modification	Date	Name	Norm	DIN	Nº ORDER 13.025		\Z69	+
									Sheet 185
									Next 186

PATH: 24981A/Diagrams/01-Electrical schemes/185

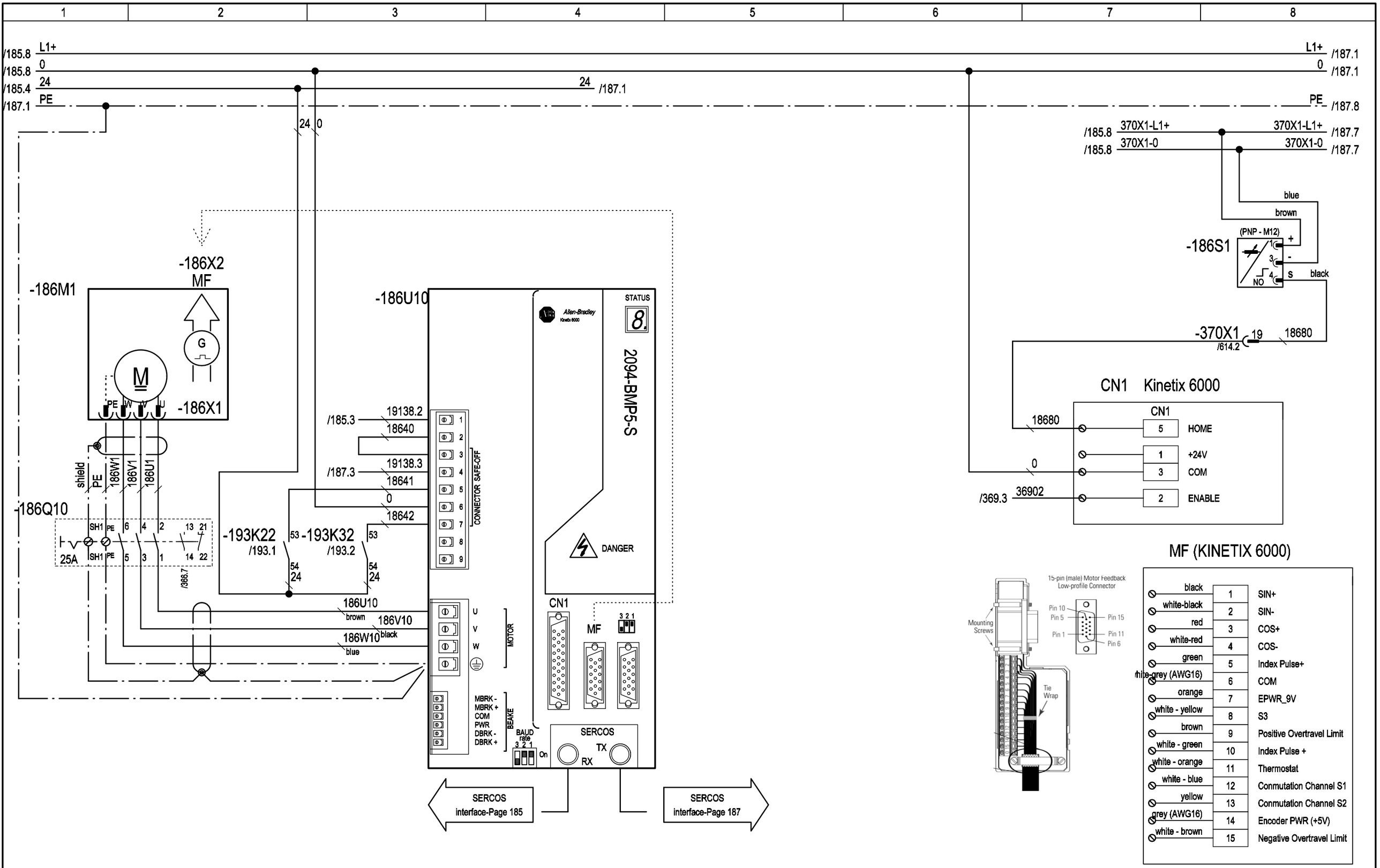

3				Date	\Z72	NURTURE, INC. (USA)	ACMAVOLPAK	TYPE OF MACHINE: SM-360 F4 WD	POWER
2				Draw.	A.LLEONART			PROJECT Nº: 24981A	CAPS APLICATOR 3 (CA-998/4)
1	DIN			Print.	22.07.2014				
	Modification	Date	Name	Norm	DIN	Nº ORDER 13.025		\Z69	= / + / Sheet 186 / Next 187

PATH: 24981A/Diagrams/01-Electrical schemes/186

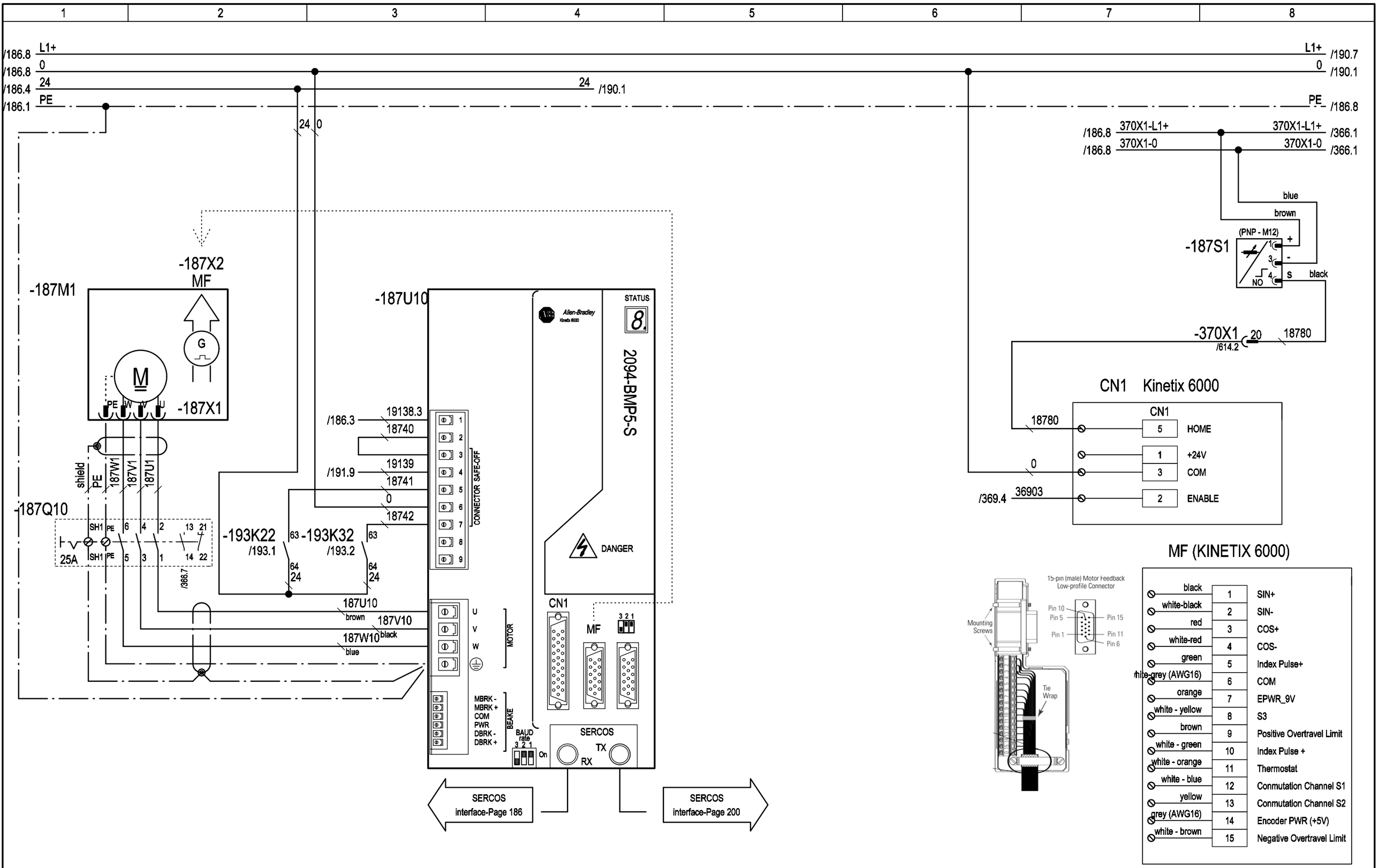

3				Date	\Z72	NURTURE, INC. (USA)	ACMAVOLPAK	TYPE OF MACHINE: SM-360 F4 WD	POWER
2				Draw.	A.LLEONART			PROJECT Nº: 24981A	CAPS APLICATOR 4 (CA-998/4)
1	DIN			Print.	22.07.2014				
	Modification	Date	Name	Norm	DIN	Nº ORDER 13.025		\Z69	= / + / Sheet 187 / Next 190

PATH: 24981A/Diagrams/01-Electrical schemes/187

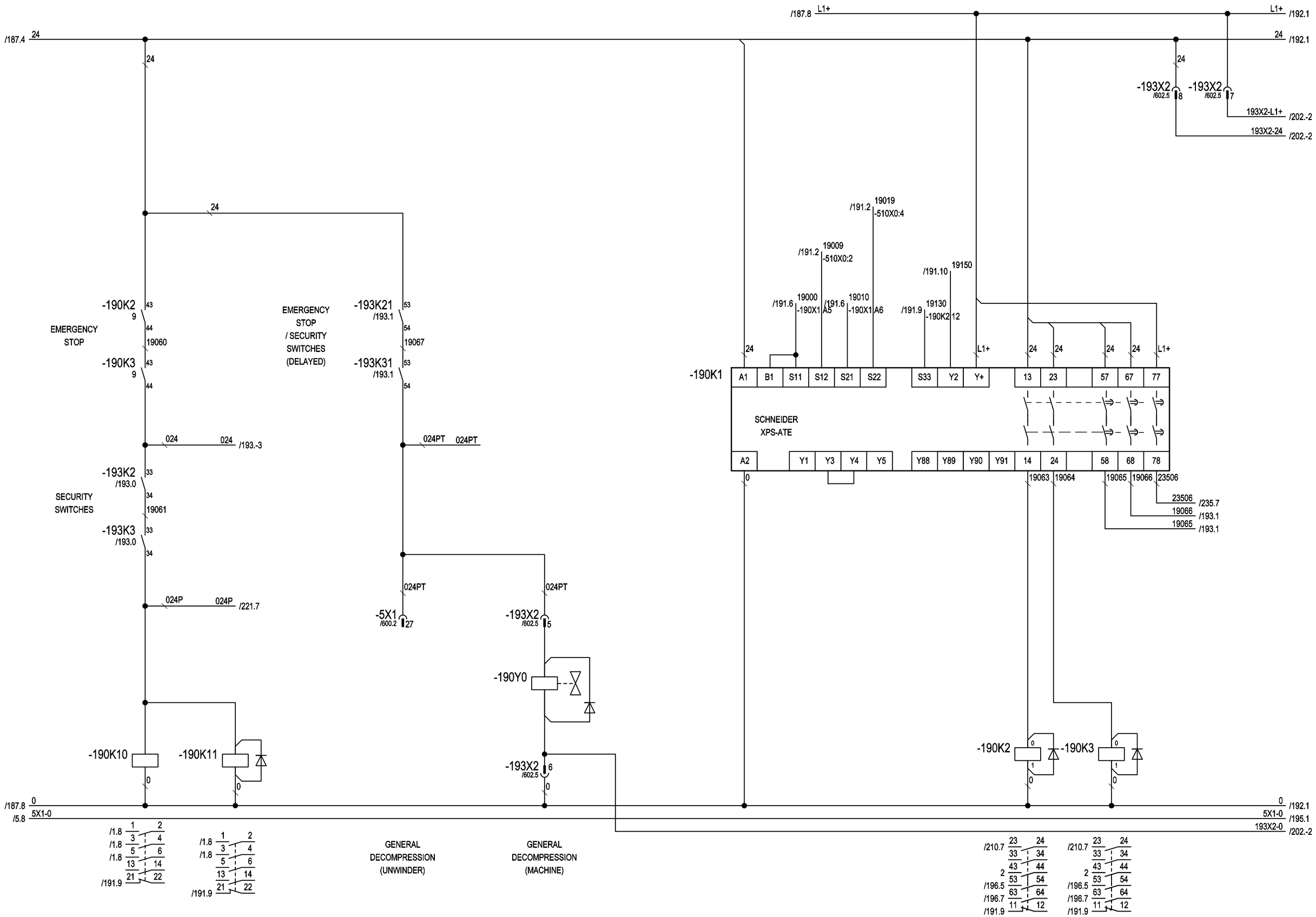

3				Date	22.07.2014	NURTURE, INC. (USA)	ACMAVOLPAK	TYPE OF MACHINE: SM-360 F4 WD	EMERGENCY STOP
2				Draw.	A.LLEONART			PROJECT Nº: 24981A	
1				Comp.		Nº ORDER 13.025		DRAWING Nº	
	Modification	Date	Name	Norm	DIN				

=
+
Sheet 190
Next 191

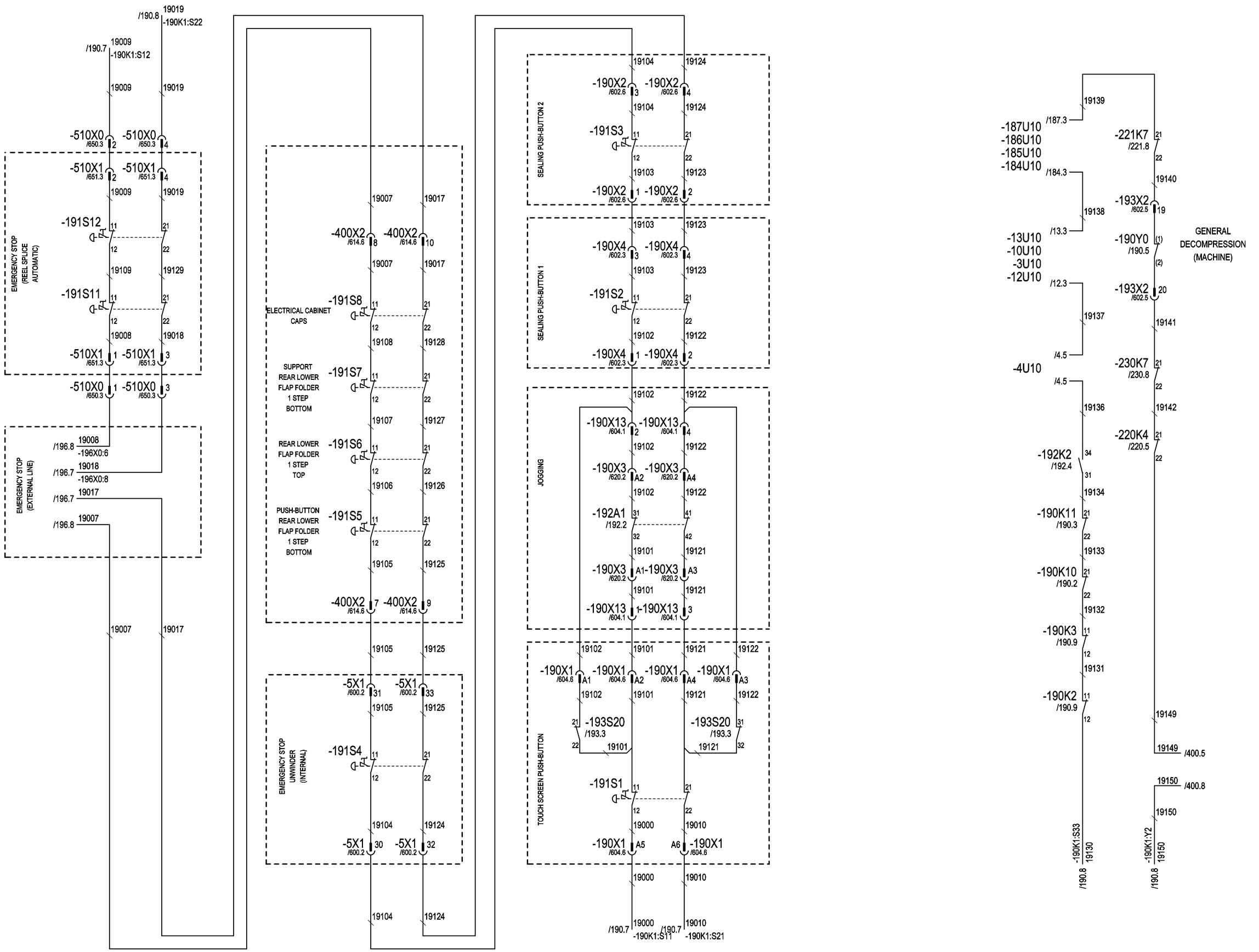

3				Date	22.07.2014	NURTURE, INC. (USA)	ACMAVOLPAK	TYPE OF MACHINE: SM-360 F4 WD	EMERGENCY STOP
2				Draw.	A.LLEONART			PROJECT Nº: 24981A	=
1				Comp.					+
	Modification	Date	Name	Norm	DIN	Nº ORDER 13.025		DRAWING Nº	Sheet 191
									Next 192

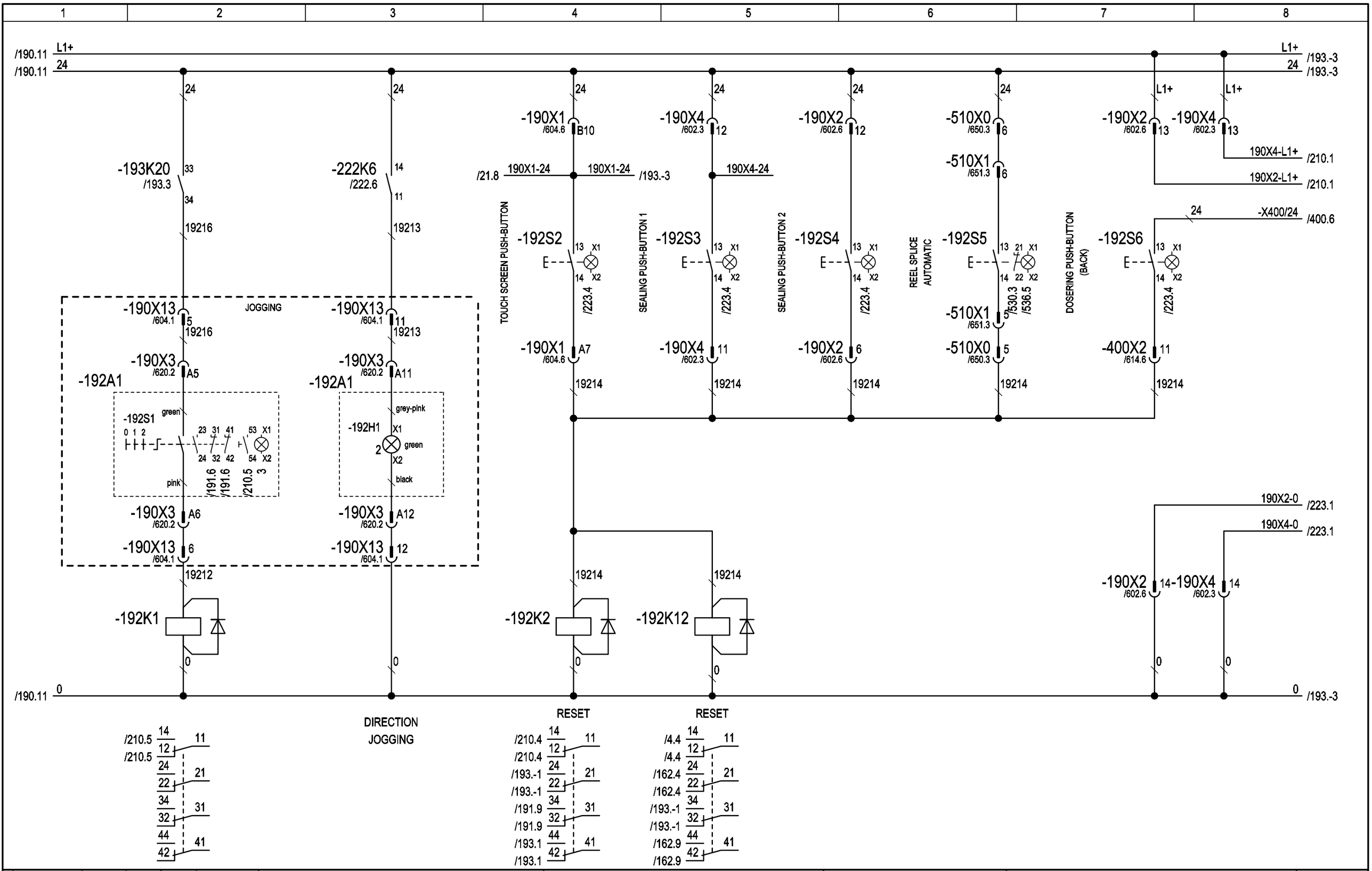

3				Date	\Z72	NURTURE, INC. (USA)	ACMAVOLPAK	TYPE OF MACHINE: SM-360 F4 WD	CONTROL JOGGING
2				Draw.	A.LLEONART			PROJECT Nº: 24981A	
1	DIN			Print.	22.07.2014			\Z69	
	Modification	Date	Name	Norm	DIN	Nº ORDER 13.025			

=
+
Sheet 192
Next 193

PATH: 24981A/Diagrams/01-Electrical schemes/192

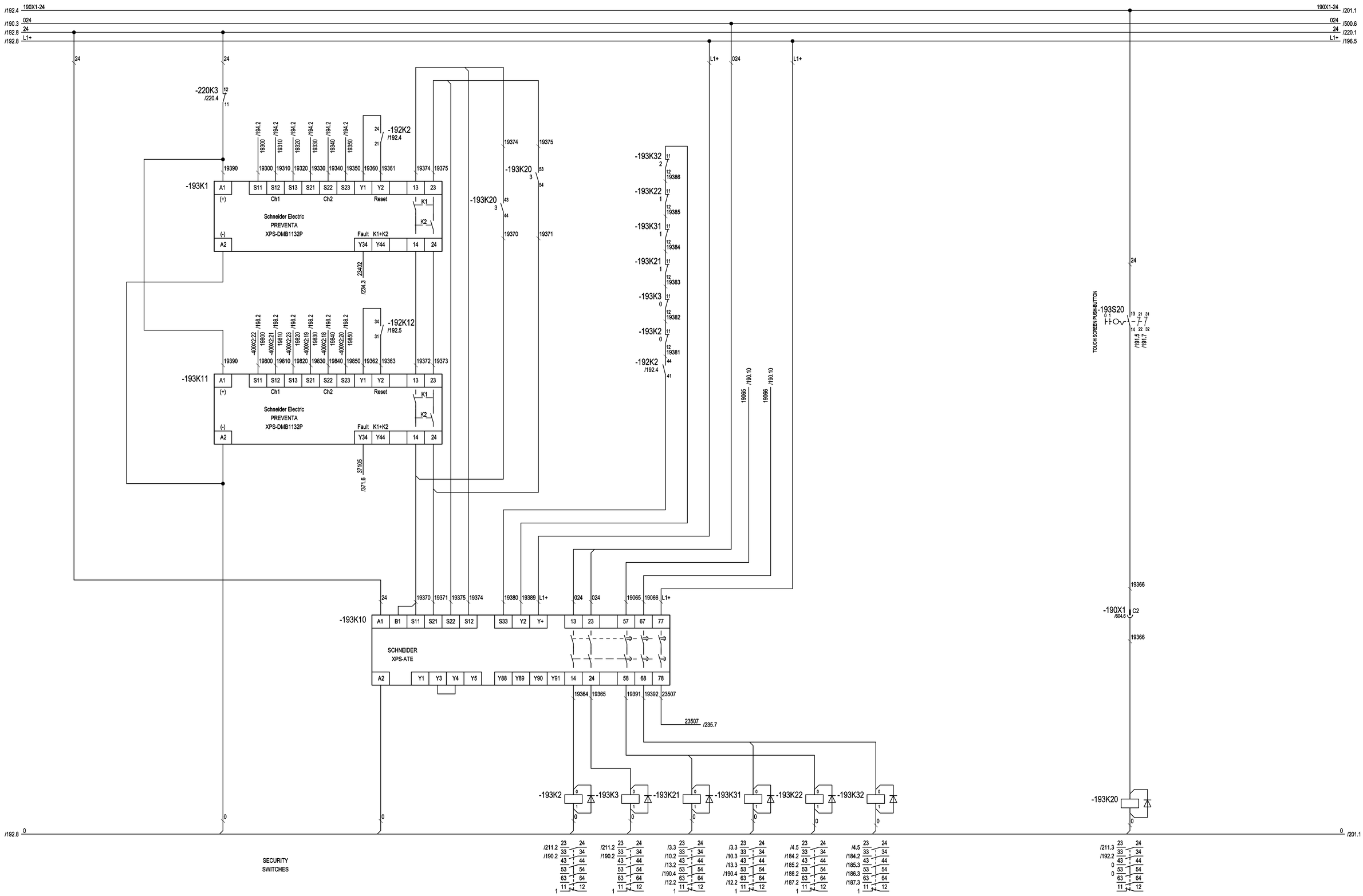

3			24981A/D	Drawn.	22.07.2014	NURTURE, INC. (USA)	ACMAVOLPAK	TYPE OF MACHINE: SM-360 F4 WD	SAFETY GUARDS
2				Draw.	A.LLEONART			PROJECT Nº: 24981A	
1				Comp.				\Z69	
	Modification	Date	Name	Norm	DIN	Nº ORDER 13.025			

=
+
Sheet 193
155 Sh.

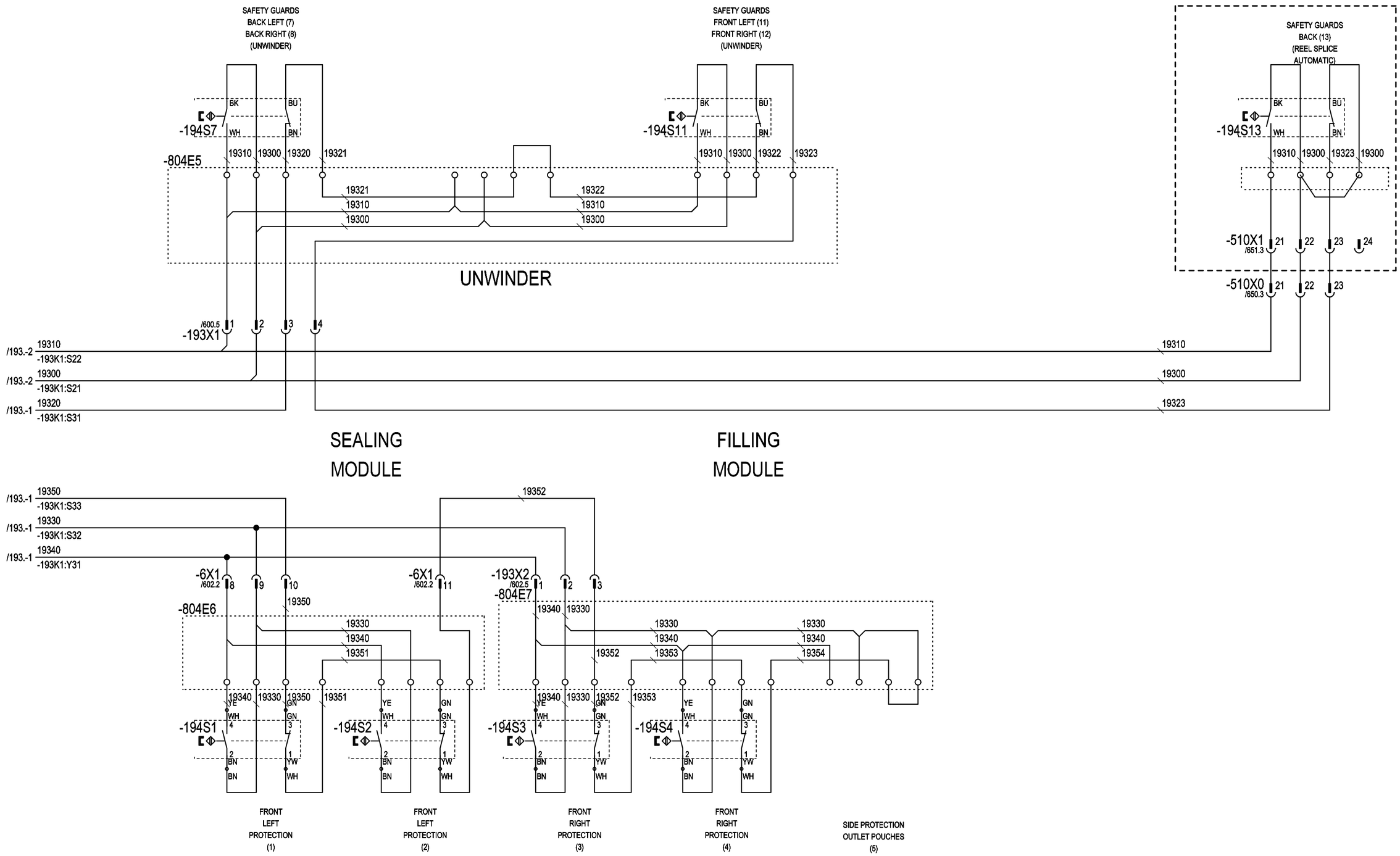

3				Date	22.07.2014	NURTURE, INC. (USA)	ACMAVOLPAK	TYPE OF MACHINE: SM-360 F4 WD	SAFETY GUARDS	=
2				Draw.	A.LLEONART			PROJECT Nº: 24981A		+
1				Comp.						Sheet 194
	Modification	Date	Name	Norm	DIN	Nº ORDER 13.025		DRAWING Nº		Next 195

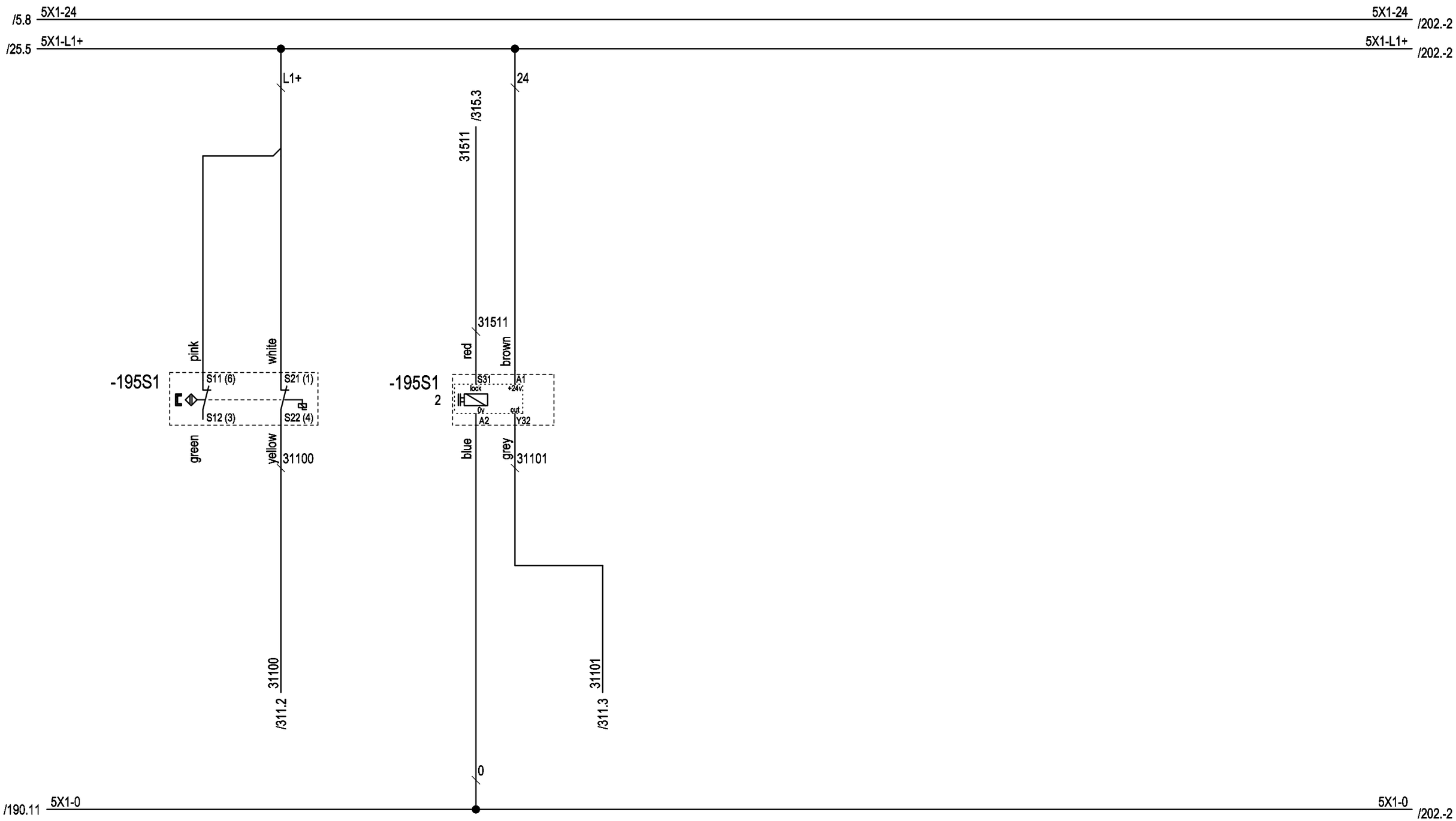

PEROXIDE'S CABINET PROTECTION CLOSED AND LOCKED (UNWINDER)

PEROXID DOOR LOCK (UNWINDER)

PEROXIDE'S CABINET PROTECTION CLOSED (UNWINDER)

PEROXIDE'S CABINET PROTECTION CLOSED AND LOCKED (CAPS APLICATOR)

PEROXID DOOR LOCK (CAPS APLICATOR)

PEROXIDE'S CABINET PROTECTION CLOSED (CAPS APLICATOR)

3				Date	\Z72	NURTURE, INC. (USA)	ACMAVOLPAK	TYPE OF MACHINE: SM-360 F4 WD	SAFETY GUARDS PEROXIDE	=
2				Draw.	A.LLEONART			PROJECT Nº: 24981A		+
1	DIN			Print.	22.07.2014					Sheet 195
	Modification	Date	Name	Norm	DIN	Nº ORDER 13.025		\Z69		Next 196

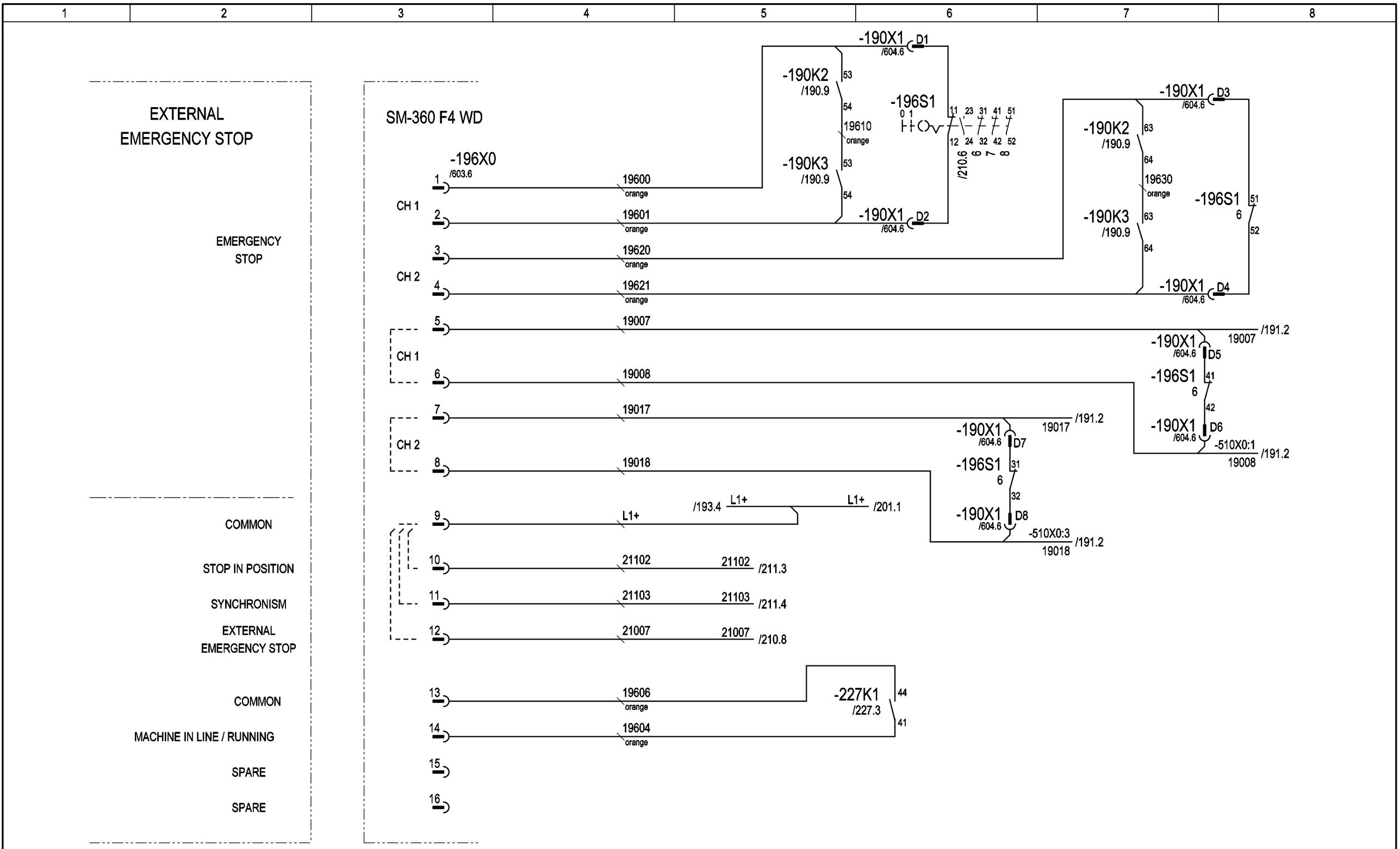

3				Date	\Z72	NURTURE, INC. (USA)	ACMAVOLPAK	TYPE OF MACHINE: SM-360 F4 WD	OUTLET LINE INTERFACE	=
2				Draw.	A.LLEONART			PROJECT Nº: 24981A		+
1	DIN			Print.	22.07.2014					Sheet 196
	Modification	Date	Name	Norm	DIN	Nº ORDER 13.025		\Z69		Next 198

PATH: 24981A/Diagrams/01-Electrical schemes/196

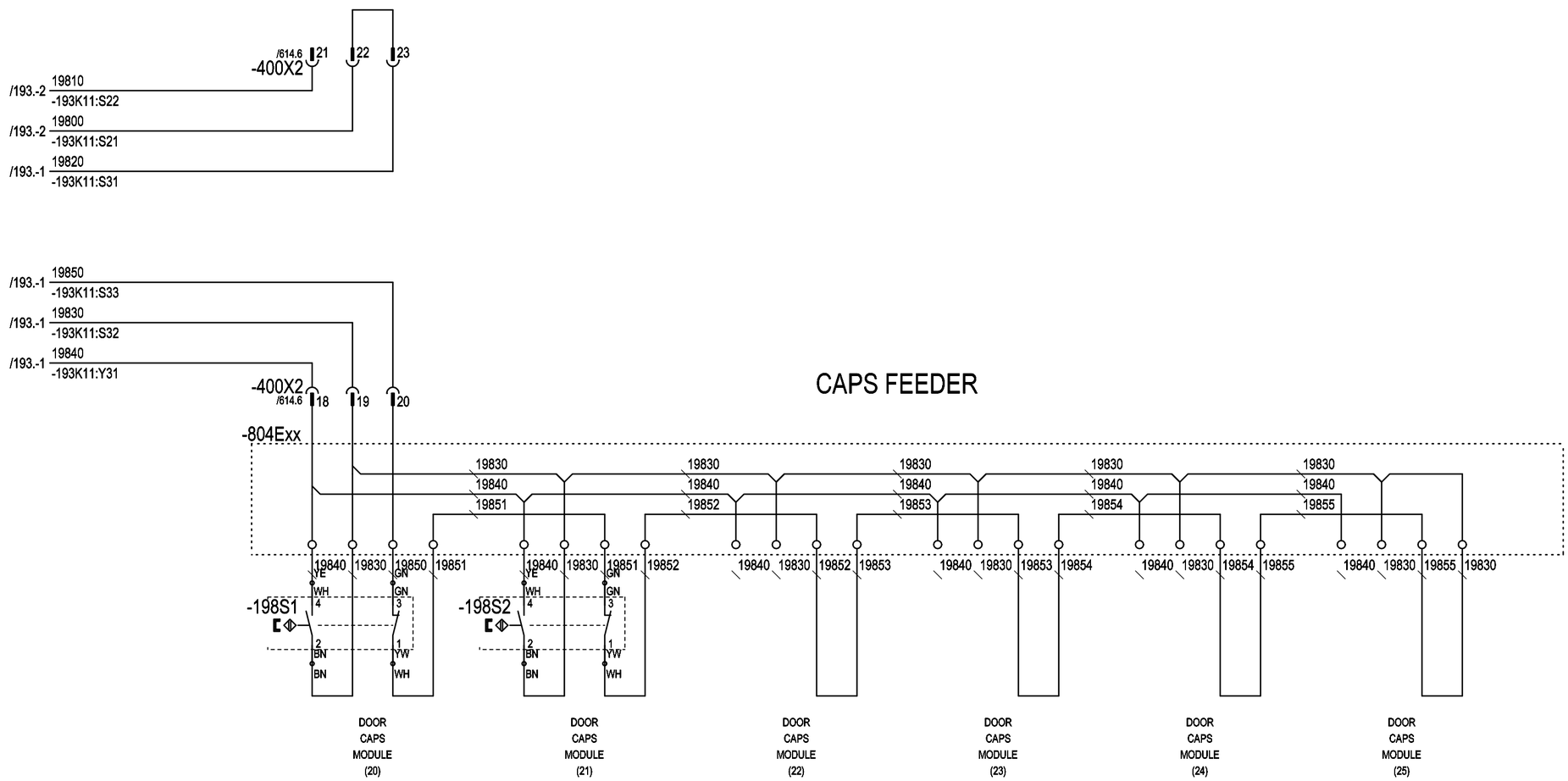

3				Date	22.07.2014	NURTURE, INC. (USA)	ACMAVOLPAK	TYPE OF MACHINE: SM-360 F4 WD	SAFETY GUARDS	=
2				Draw.	A.LLEONART			PROJECT Nº: 24981A		+
1				Comp.						Sheet 198
	Modification	Date	Name	Norm	DIN	Nº ORDER 13.025		DRAWING Nº		Next 200

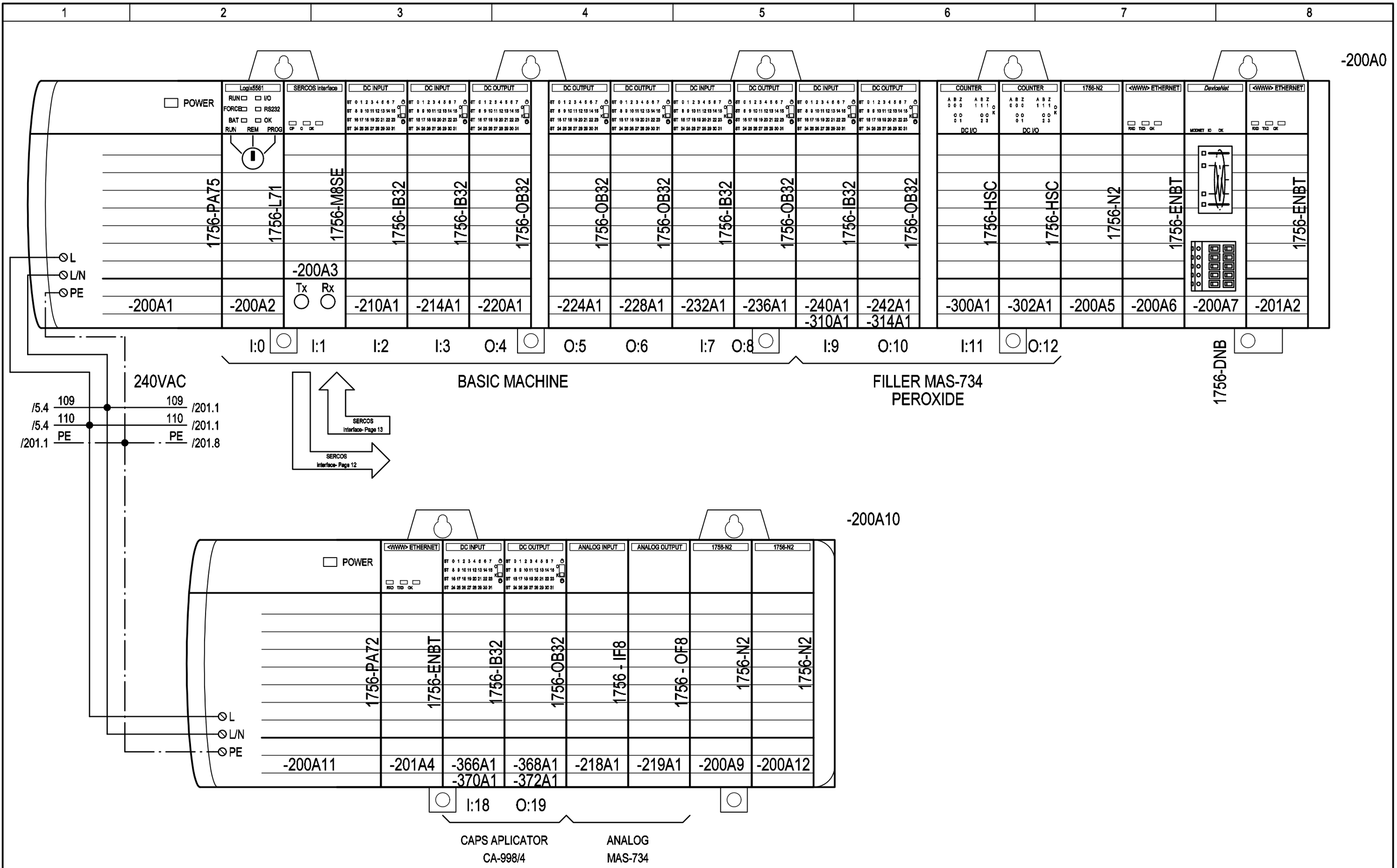

3				Date	\Z72	NURTURE, INC. (USA)	ACMAVOLPAK	TYPE OF MACHINE: SM-360 F4 WD	PLC'S DISTRIBUTION	=	
2				Draw.	A.LLEONART			PROJECT Nº: 24981A		+	
1	DIN			Print.	22.07.2014					Sheet 200	
	Modification	Date	Name	Norm	DIN	Nº ORDER 13.025		\Z69		Next 201	

PATH: 24981A/Diagrams/01-Electrical schemes/200

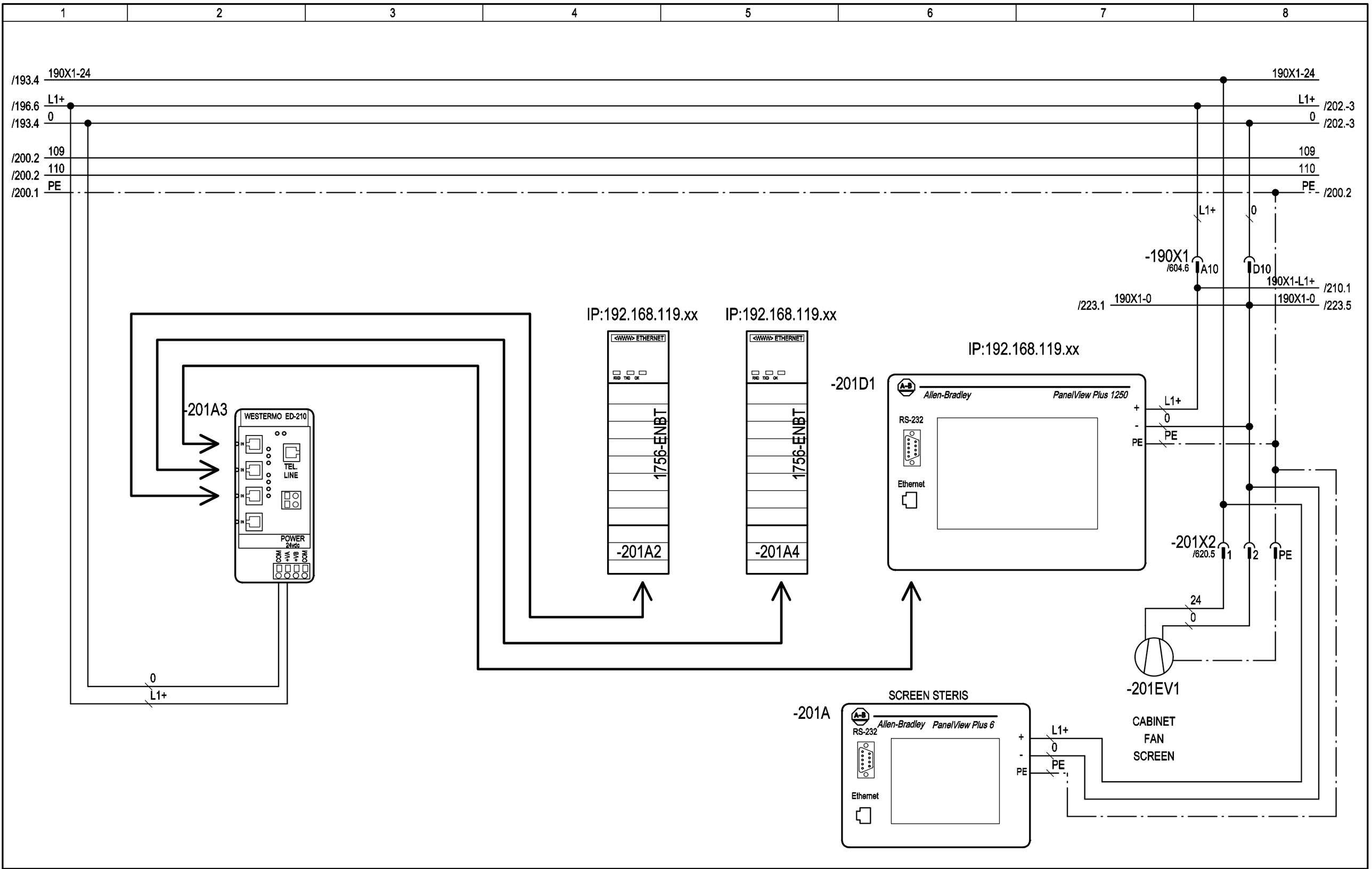

3				Date	\Z72	NURTURE, INC. (USA)	ACMAVOLPAK	TYPE OF MACHINE: SM-360 F4 WD	PLC'S DISTRIBUTION	=
2				Draw.	A.LLEONART			PROJECT Nº: 24981A		+
1	DIN			Print.	22.07.2014					Sheet 201
	Modification	Date	Name	Norm	DIN	Nº ORDER 13.025		\Z69		Next 202

PATH: 24981A/Diagrams/01-Electrical schemes/201

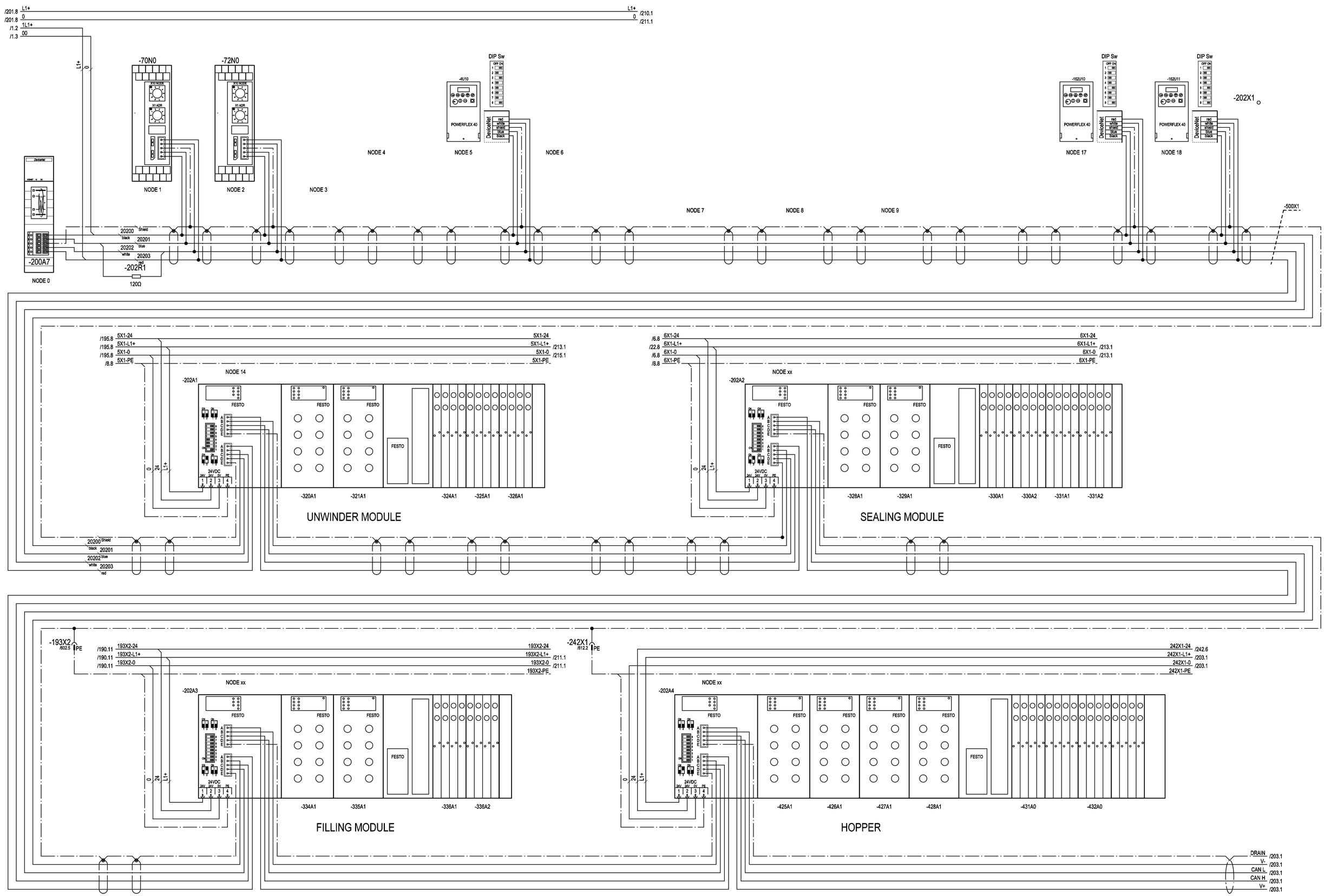

3			24981A/Diagrams	22.07.2014	NURTURE, INC. (USA)	TYPE OF MACHINE: SM-360 F4 WD	Device Net
2				Draw. A.LLEONART		PROJECT Nº: 24981A	
1				Comp.		\Z69	
	Modification	Date	Name	Norm DIN	Nº ORDER 13.025	ACMAVOLPAK	Sheet 202 / 155 Sh.

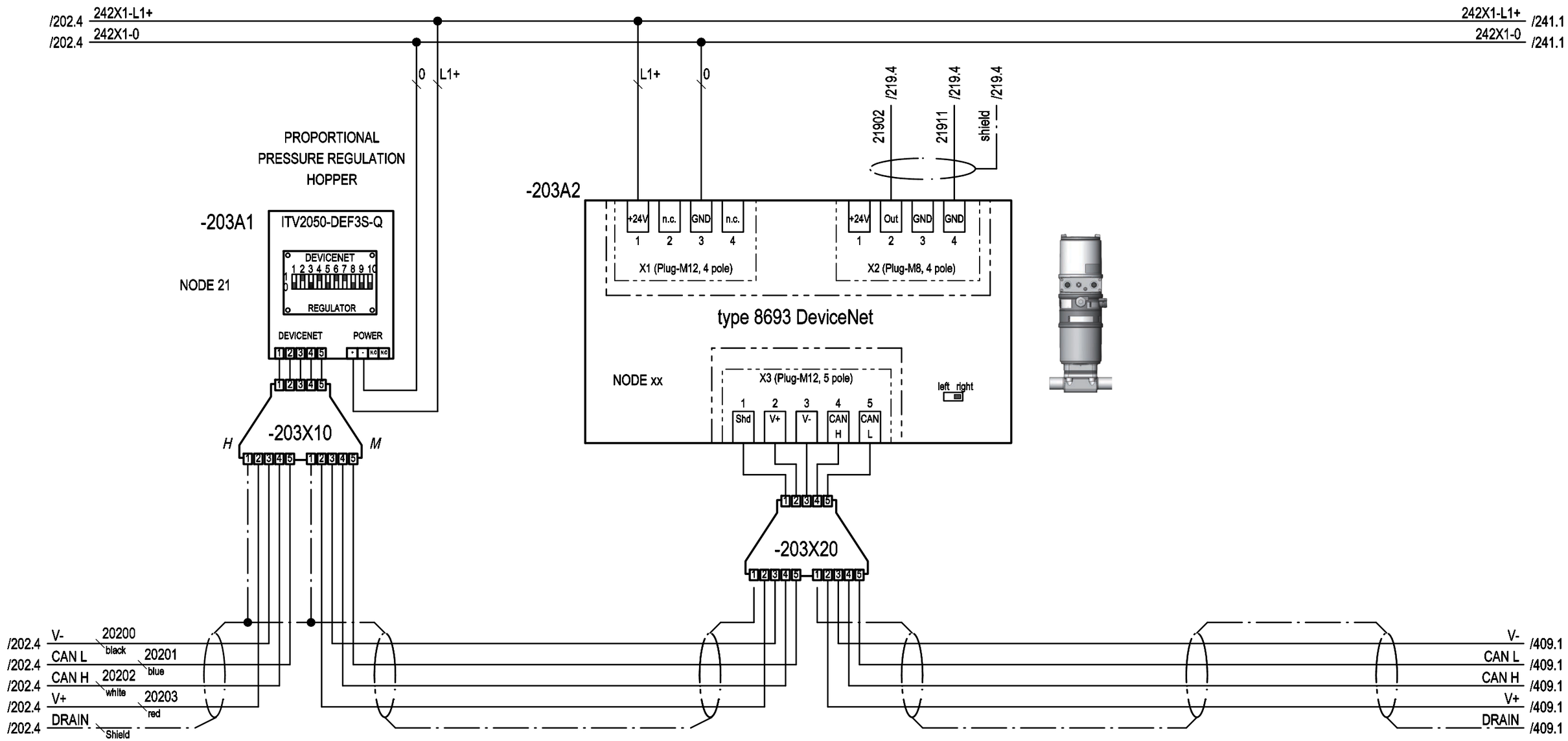

NO	COLOUR	CODE
1	NAKED	DRAIN
2	RED	V+
3	BLACK	V-
4	WHITE	CANAL_H
5	BLUE	CANAL_L

VALVE (No.13)
PRESSION TANK

3				Date	\Z72
2				Draw.	A.LLEONART
1	DIN			Print.	22.07.2014
	Modification	Date	Name	Norm	DIN

NURTURE, INC.
(USA)
Nº ORDER 13.025

ACMAVOLPAK

TYPE OF MACHINE: SM-360 F4 WD
PROJECT Nº: 24981A
\Z69

Device Net

=
+
Sheet 203
Next 210

PATH: 24981A/Diagrams/01-Electrical schemes/203

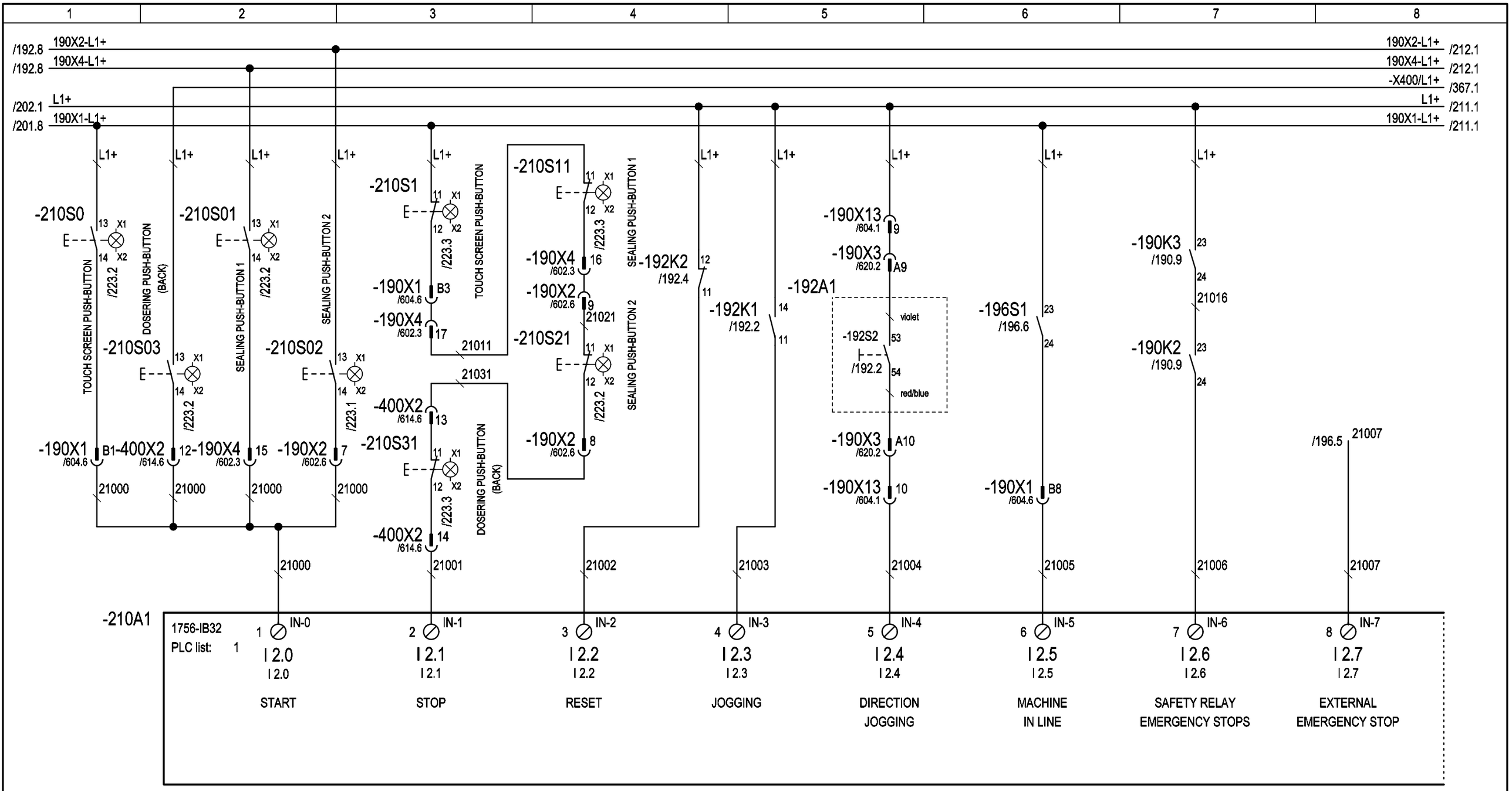

3				Date	\Z72	NURTURE, INC. (USA)	ACMAVOLPAK	TYPE OF MACHINE: SM-360 F4 WD	PLC's INPUTS	=
2				Draw.	A.LLEONART			PROJECT Nº: 24981A		+
1	DIN			Print.	22.07.2014					Sheet 210
	Modification	Date	Name	Norm	DIN	Nº ORDER 13.025		\Z69		Next 211

PATH: 24981A/Diagrams/01-Electrical schemes/210

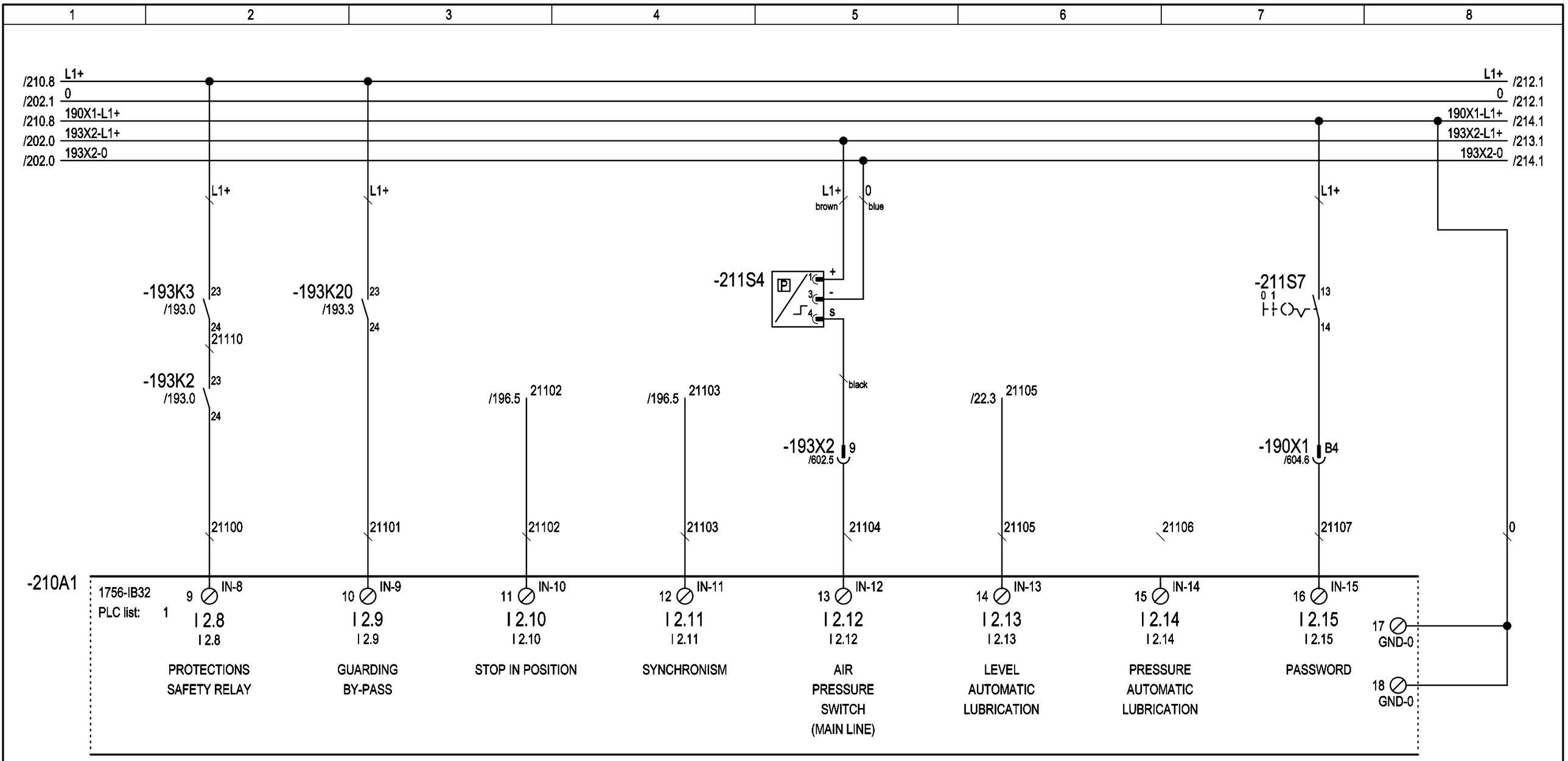

3				Date	\Z72	NURTURE, INC. (USA)	ACMAVOLPAK	TYPE OF MACHINE: SM-360 F4 WD	PLC's INPUTS	=
2				Draw.	A.LLEONART			PROJECT Nº: 24981A		+
1	DIN			Print.	22.07.2014					Sheet 211
	Modification	Date	Name	Norm	DIN	Nº ORDER 13.025		\Z69		Next 212

PATH: 24981A/Diagrams/01-Electrical schemes/211

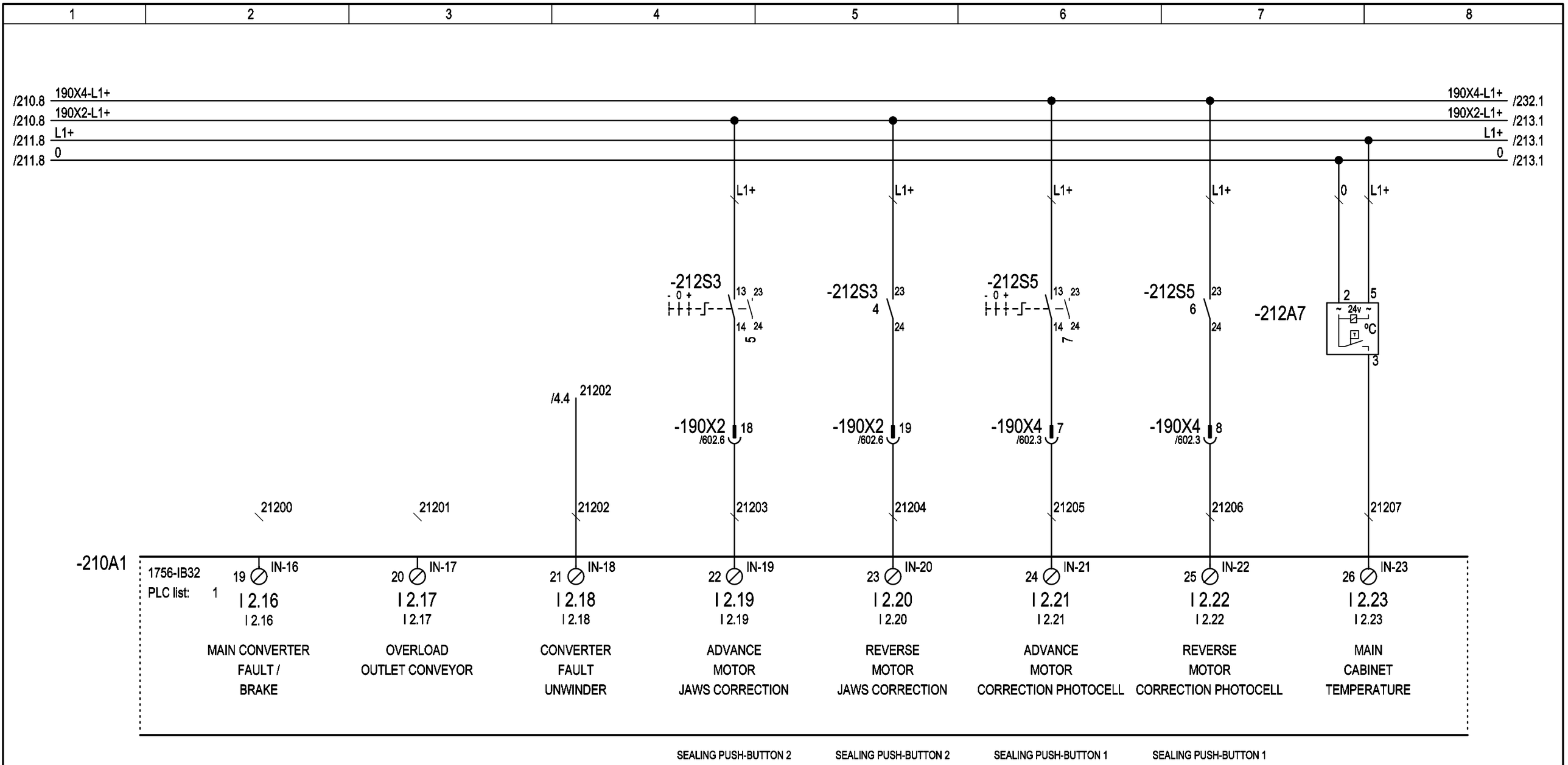

3				Date	\Z72	NURTURE, INC. (USA)	ACMAVOLPAK	TYPE OF MACHINE: SM-360 F4 WD	PLC's INPUTS	=
2				Draw.	A.LLEONART			PROJECT Nº: 24981A		+
1	DIN			Print.	22.07.2014					Sheet 212
	Modification	Date	Name	Norm	DIN	Nº ORDER 13.025		\Z69		Next 213

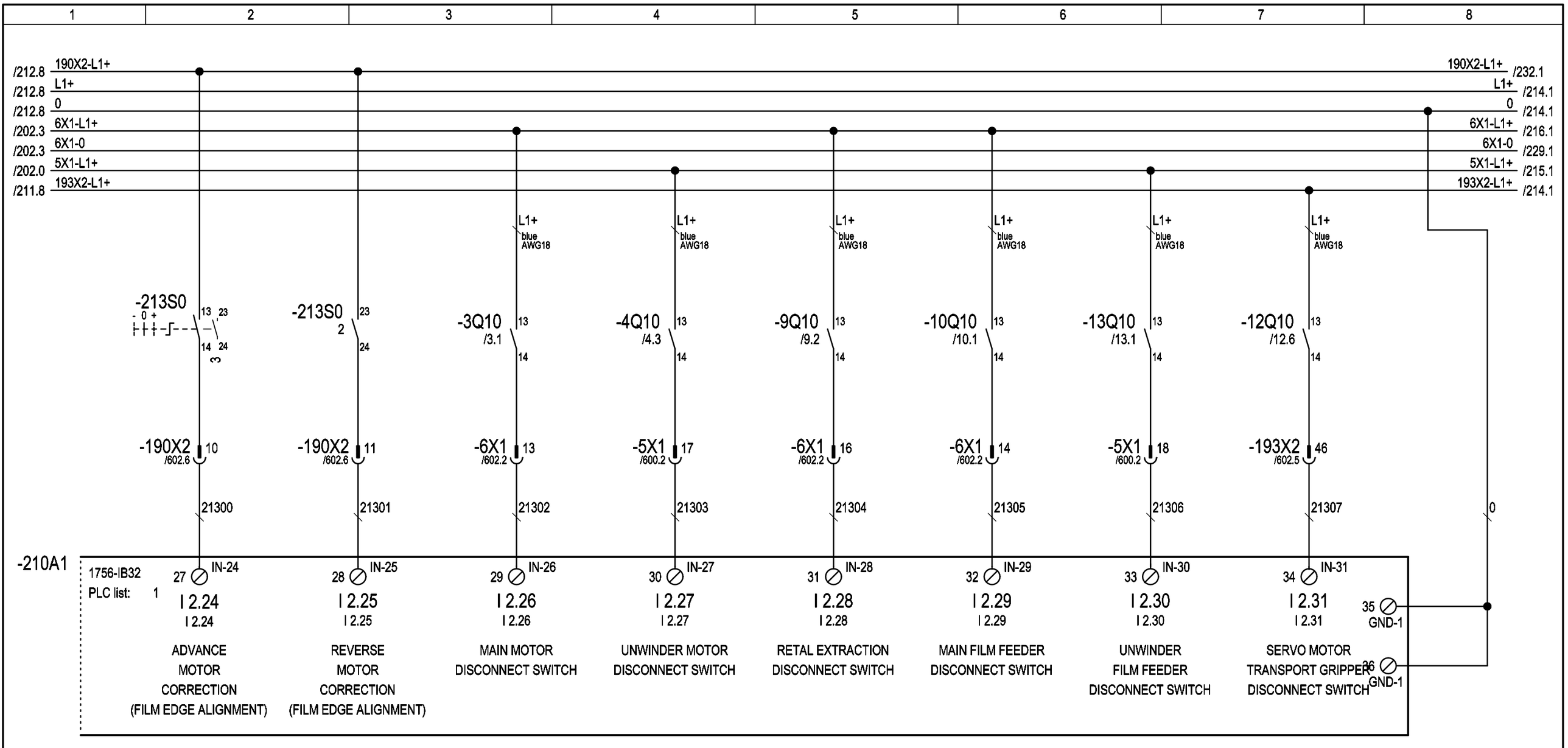

3				Date	\Z72	NURTURE, INC. (USA)	ACMAVOLPAK	TYPE OF MACHINE: SM-360 F4 WD	PLC's INPUTS	=
2				Draw.	A.LLEONART			PROJECT Nº: 24981A		+
1	DIN			Print.	22.07.2014					Sheet 213
	Modification	Date	Name	Norm	DIN	Nº ORDER 13.025		\Z69		Next 214

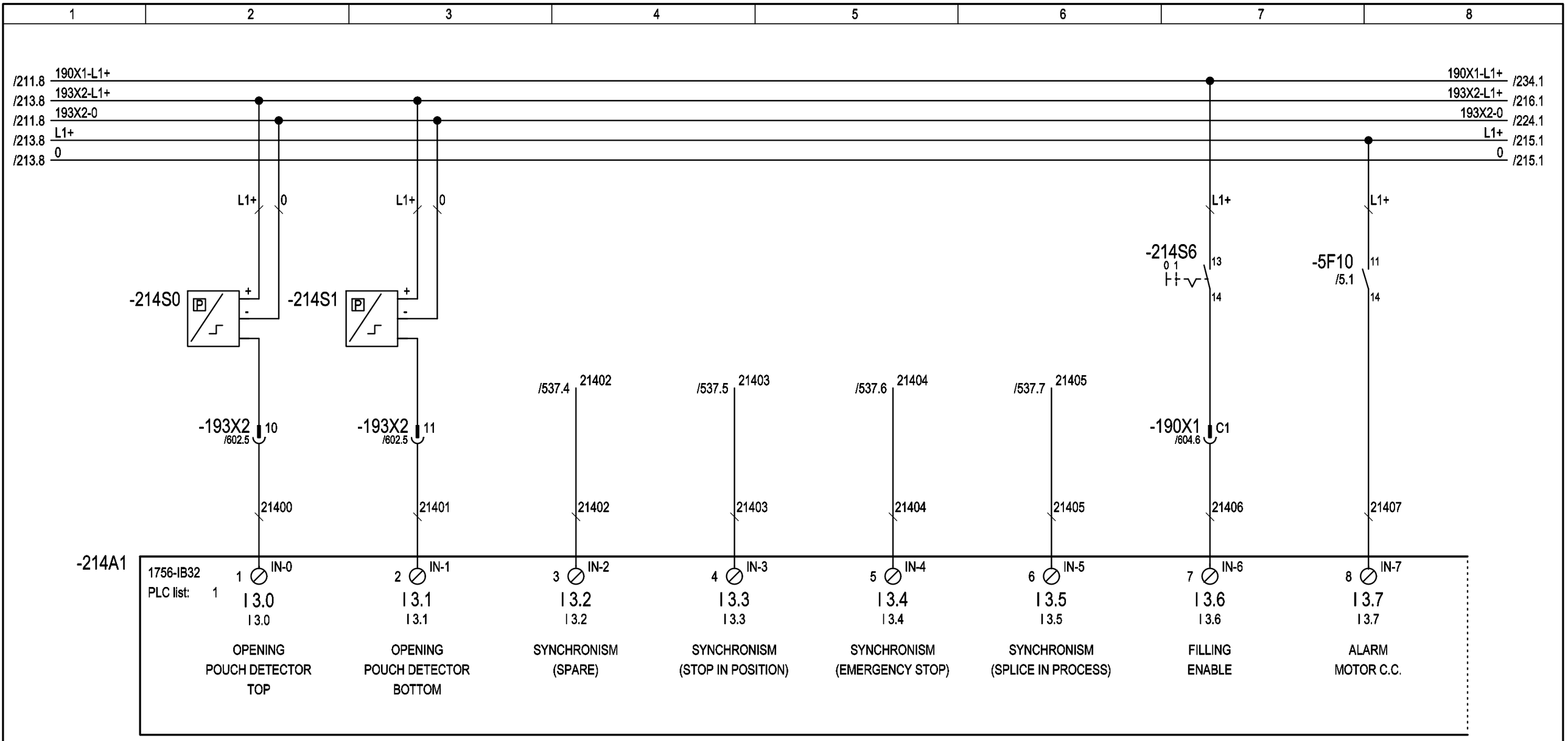

3				Date	\Z72	NURTURE, INC. (USA)	ACMAVOLPAK	TYPE OF MACHINE: SM-360 F4 WD	PLC's INPUTS	=
2				Draw.	A.LLEONART			PROJECT Nº: 24981A		+
1	DIN			Print.	22.07.2014					Sheet 214
	Modification	Date	Name	Norm	DIN	Nº ORDER 13.025		\Z69		Next 215

PATH: 24981A/Diagrams/01-Electrical schemes/214

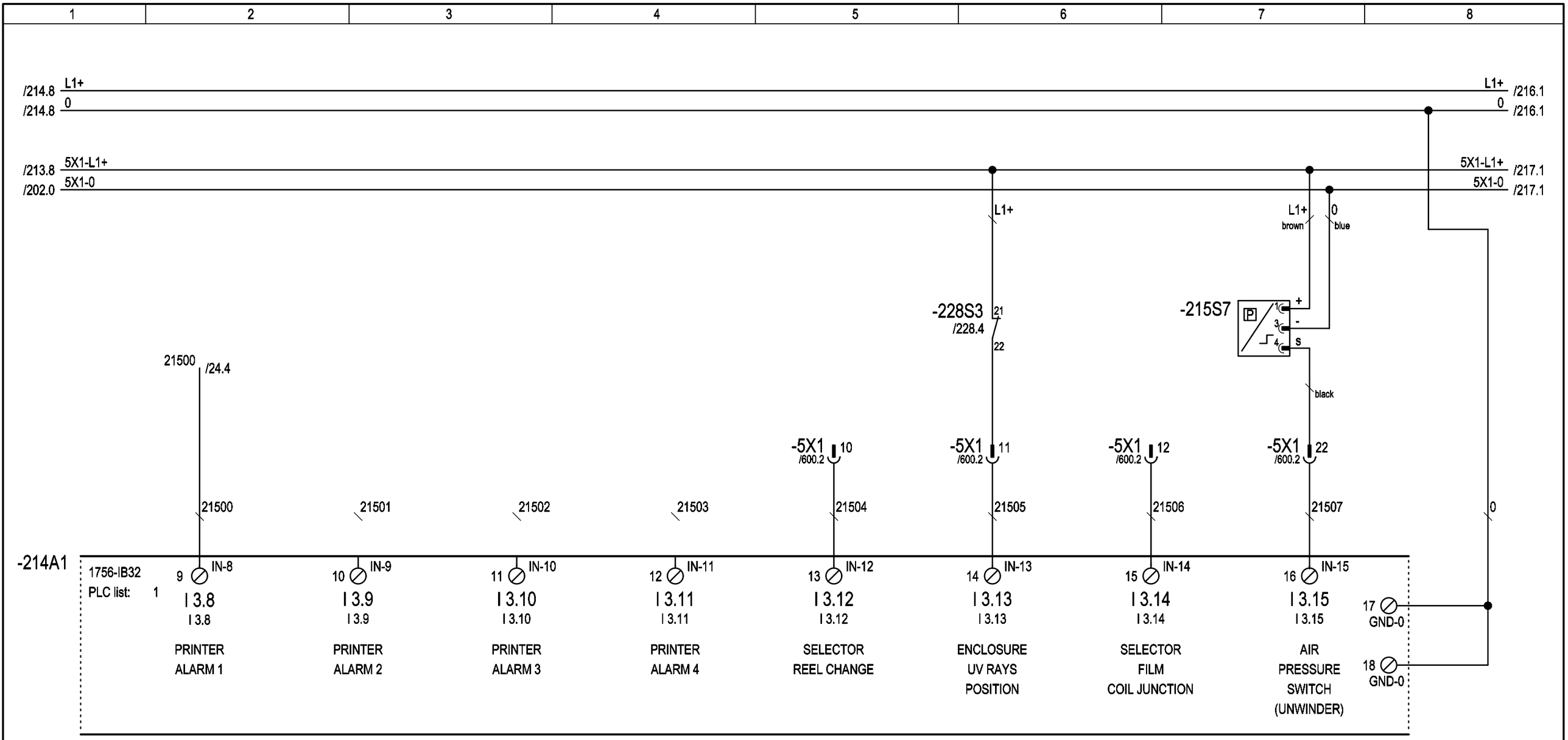

3				Date	\Z72	NURTURE, INC. (USA)	ACMAVOLPAK	TYPE OF MACHINE: SM-360 F4 WD	PLC's INPUTS	=
2				Draw.	A.LLEONART			PROJECT Nº: 24981A		+
1	DIN			Print.	22.07.2014					Sheet 215
	Modification	Date	Name	Norm	DIN	Nº ORDER 13.025		\Z69		Next 216

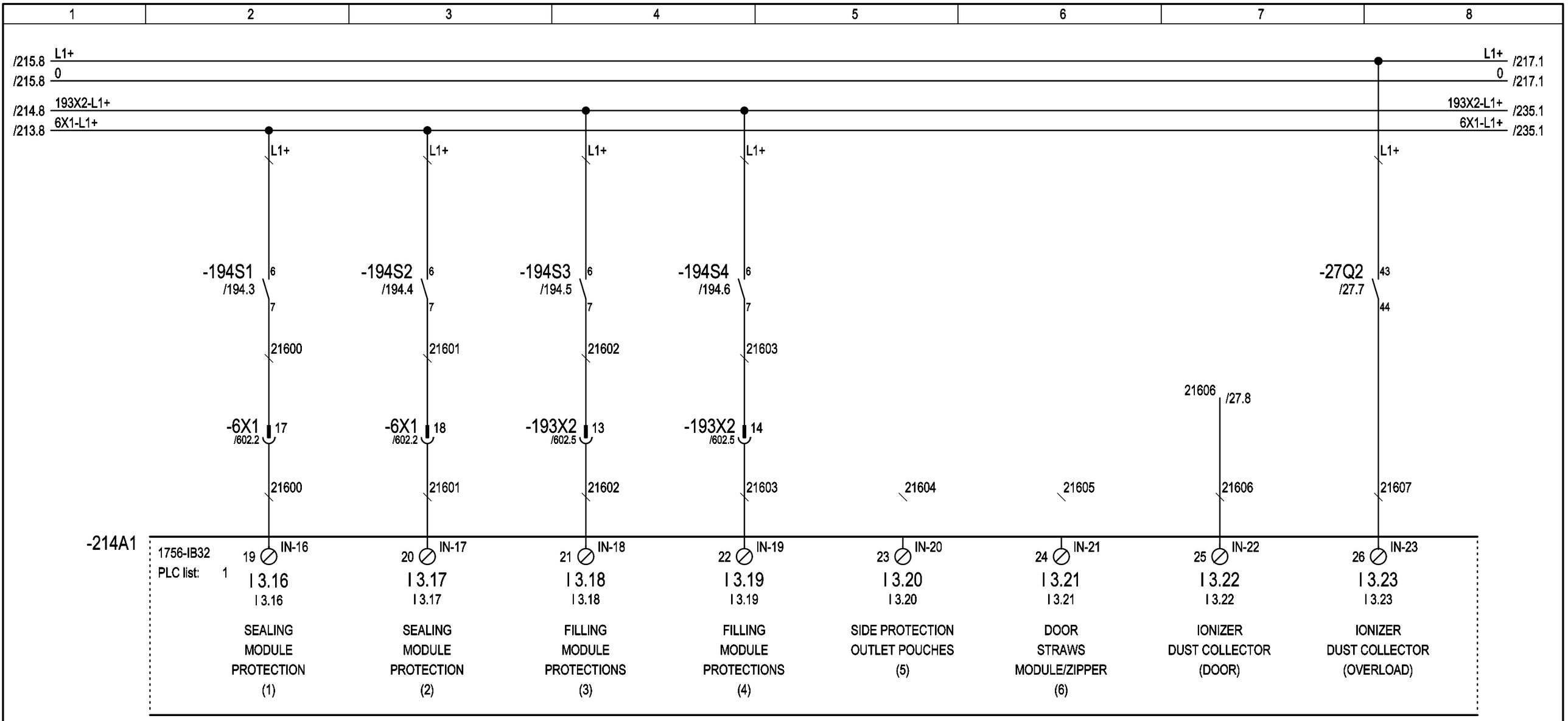

3				Date	\Z72	NURTURE, INC. (USA)	ACMAVOLPAK	TYPE OF MACHINE: SM-360 F4 WD	PLC's INPUTS	=
2				Draw.	A.LLEONART			PROJECT Nº: 24981A		+
1	DIN			Print.	22.07.2014					Sheet 216
	Modification	Date	Name	Norm	DIN	Nº ORDER 13.025		\Z69		Next 217

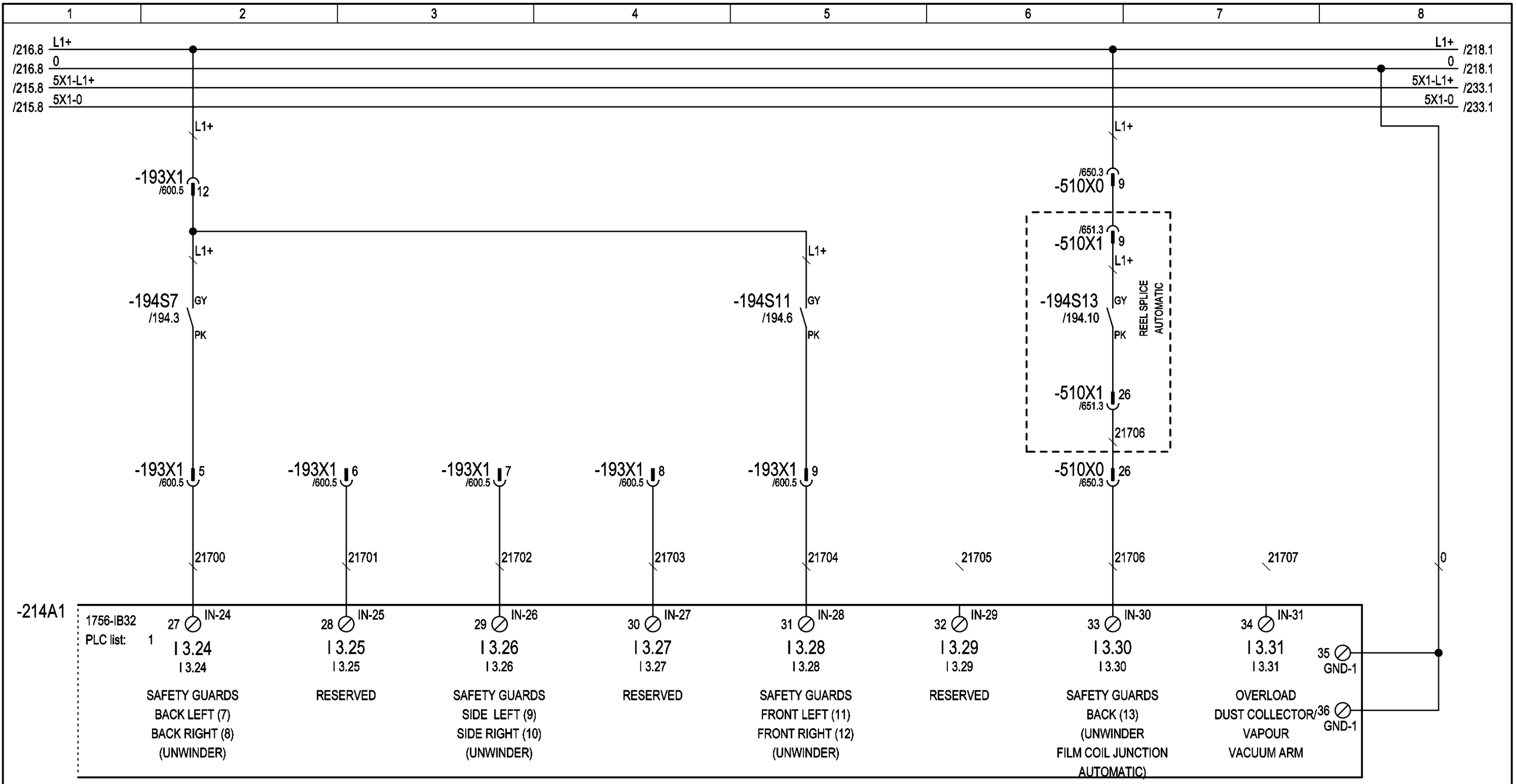

3				Date	\Z72	NURTURE, INC. (USA)	ACMAVOLPAK	TYPE OF MACHINE: SM-360 F4 WD	PLC's INPUTS	=
2				Draw.	A.LLEONART			PROJECT Nº: 24981A		+
1	DIN			Print.	22.07.2014					Sheet 217
	Modification	Date	Name	Norm	DIN	Nº ORDER 13.025		\Z69		Next 218

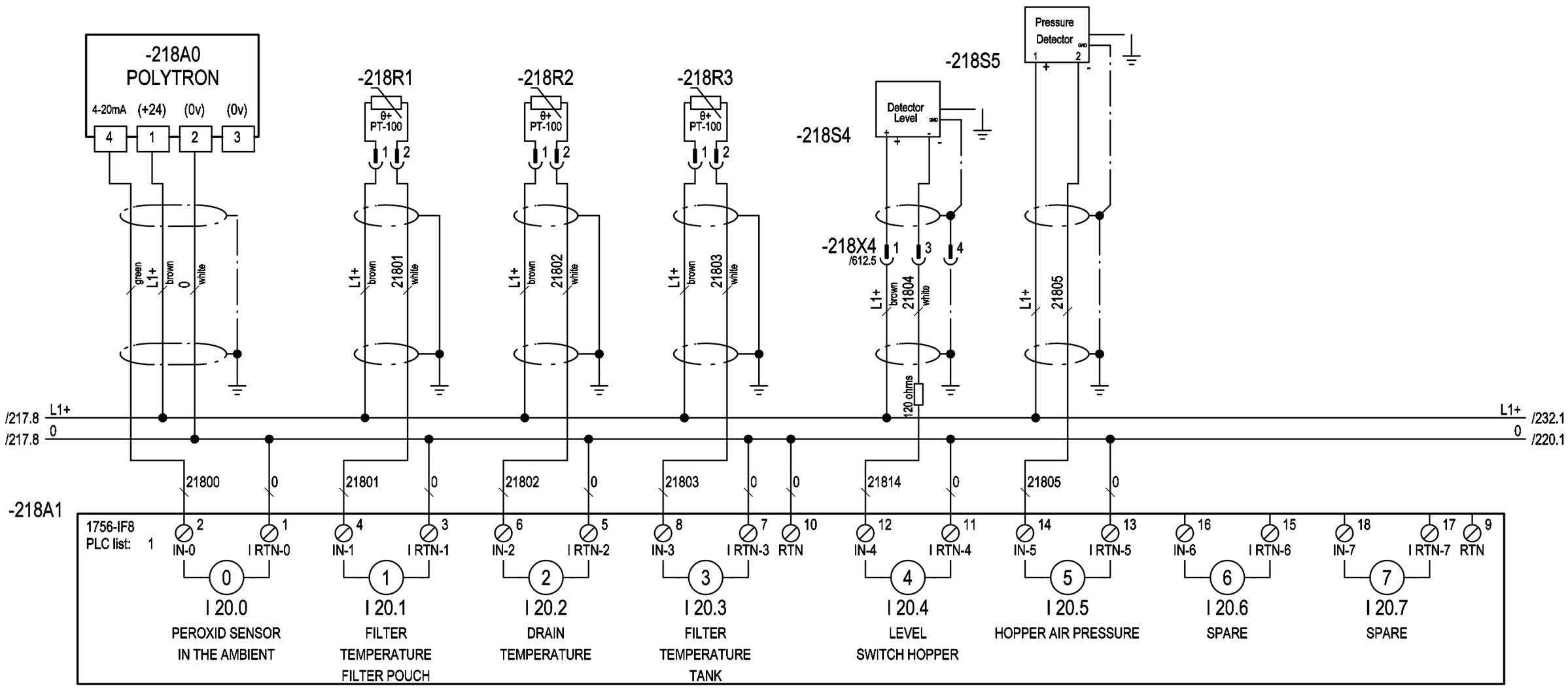

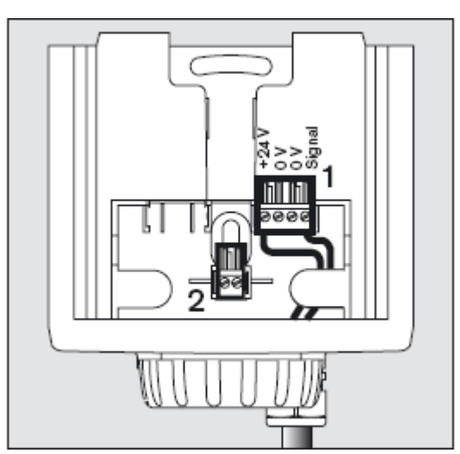

25

9

18

14

3				Date	\Z72	NURTURE, INC. (USA)	ACMAVOLPAK	TYPE OF MACHINE: SM-360 F4 WD	PLC's INPUTS	=	
2				Draw.	A.LLEONART			PROJECT Nº: 24981A		+	
1	DIN			Print.	22.07.2014					Sheet 218	
	Modification	Date	Name	Norm	DIN	Nº ORDER 13.025		\Z69		Next 219	

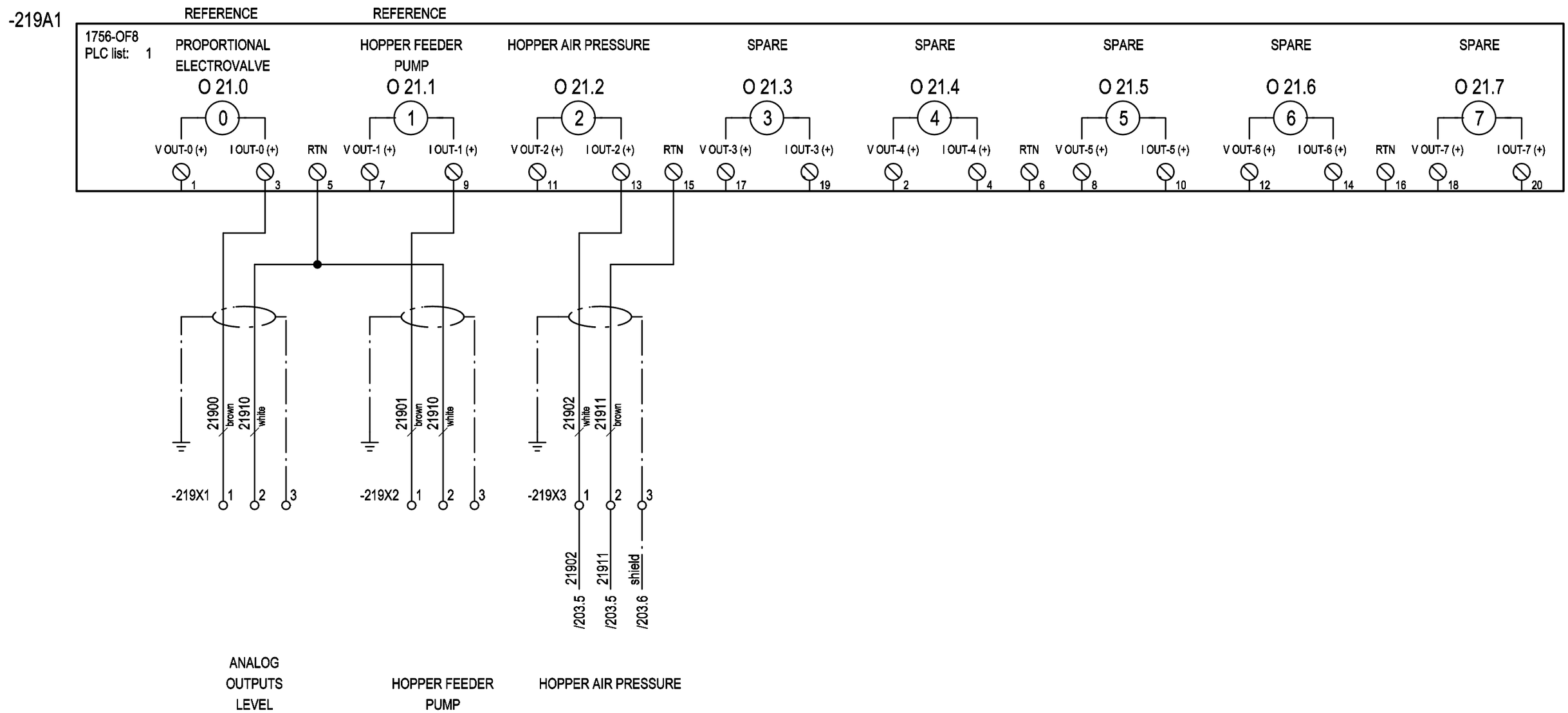

3				Date	\Z72	NURTURE, INC. (USA)	ACMAVOLPAK	TYPE OF MACHINE: SM-360 F4 WD	PLC's OUTPUTS	=
2				Draw.	A.LLEONART			PROJECT Nº: 24981A		+
1	DIN			Print.	22.07.2014					Sheet 219
	Modification	Date	Name	Norm	DIN	Nº ORDER 13.025		\Z69		Next 220

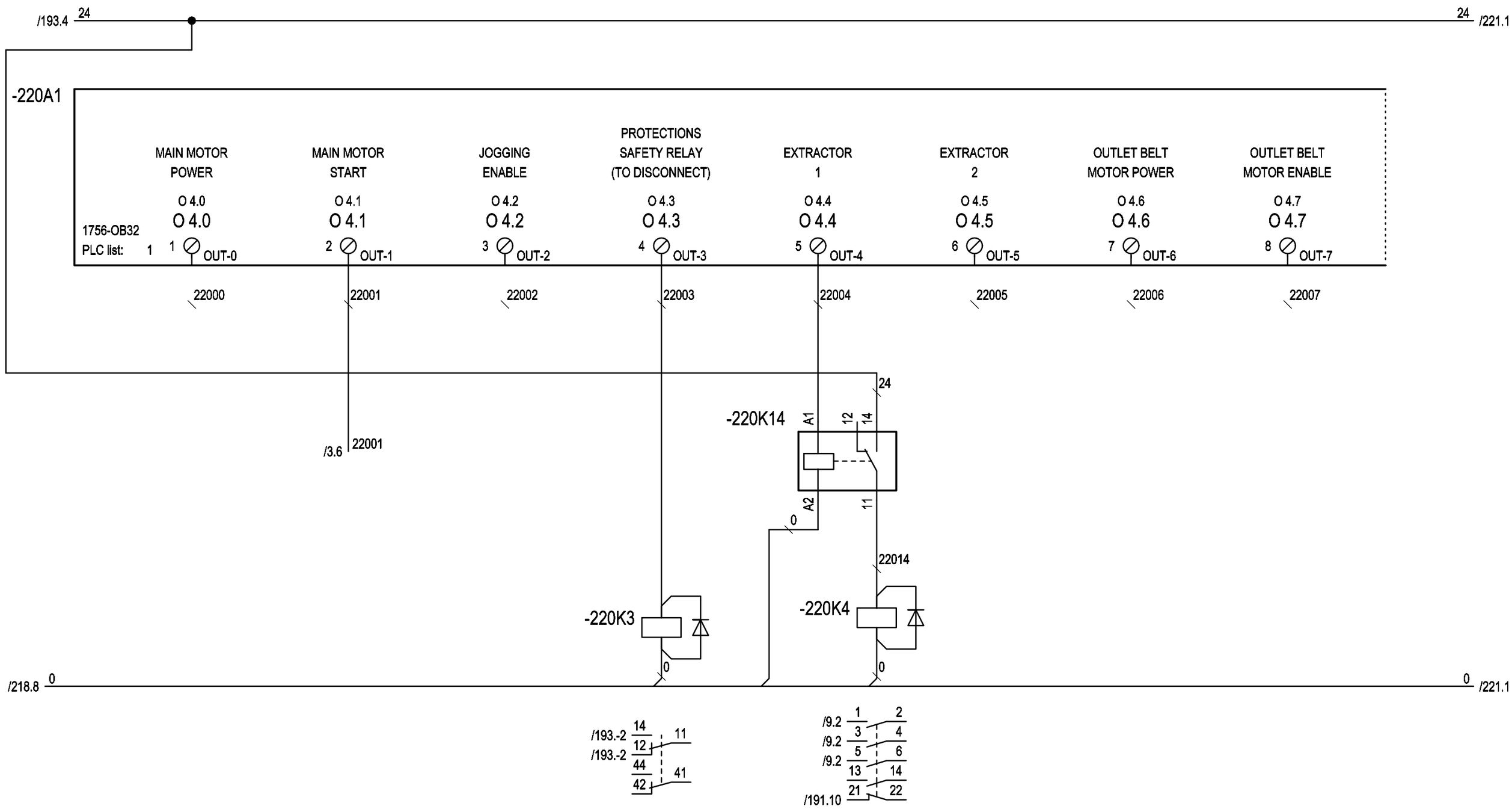

3				Date	\Z72	NURTURE, INC. (USA)	ACMAVOLPAK	TYPE OF MACHINE: SM-360 F4 WD	PLC's OUTPUTS	=
2				Draw.	A.LLEONART			PROJECT Nº: 24981A		+
1	DIN			Print.	22.07.2014					Sheet 220
	Modification	Date	Name	Norm	DIN	Nº ORDER 13.025		\Z69		Next 221

PATH: 24981A/Diagrams/01-Electrical schemes/220

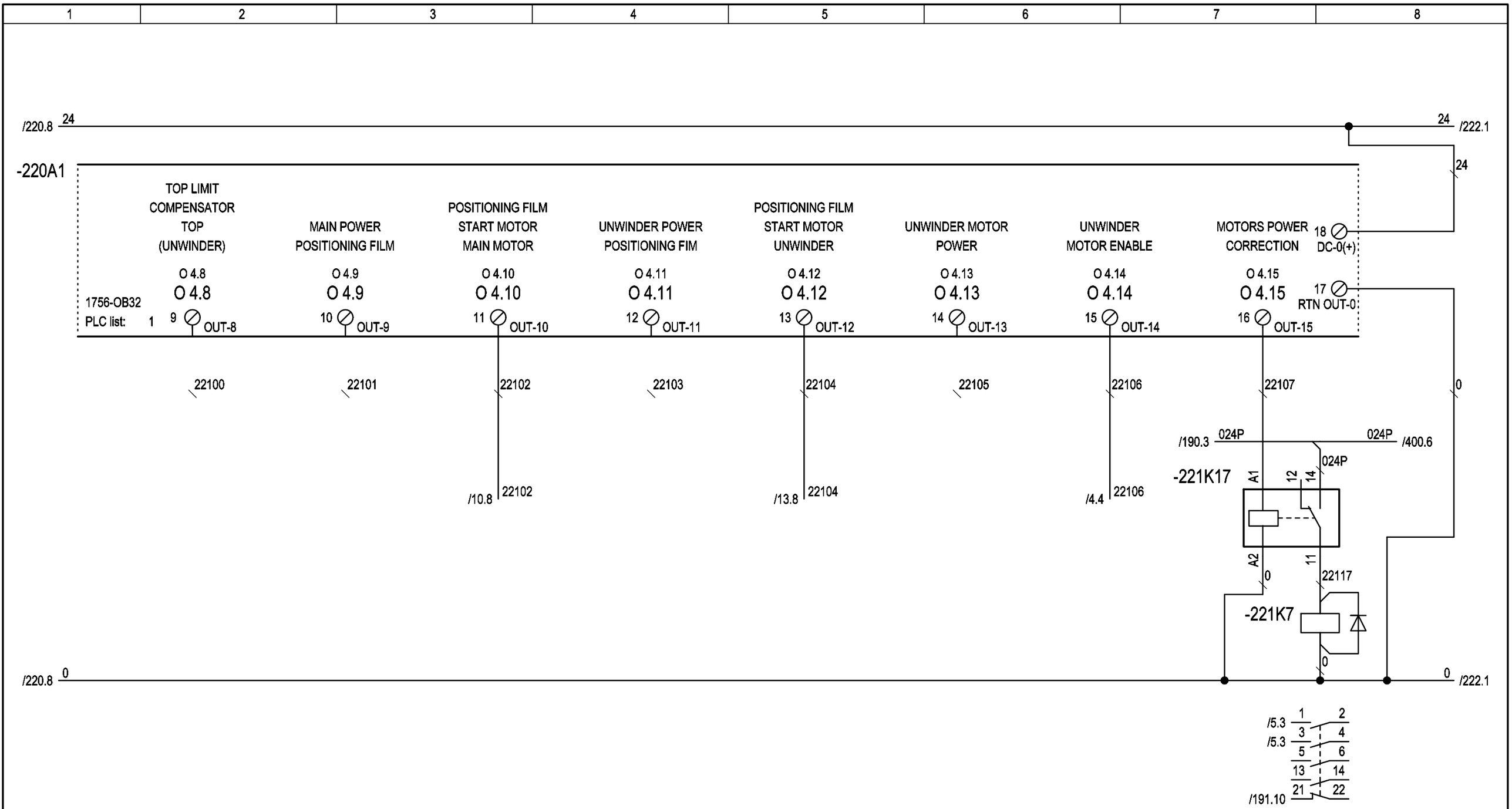

3				Date	\Z72	NURTURE, INC. (USA)	ACMAVOLPAK	TYPE OF MACHINE: SM-360 F4 WD	PLC's OUTPUTS	=
2				Draw.	A.LLEONART			PROJECT Nº: 24981A		+
1	DIN			Print.	22.07.2014					Sheet 221
	Modification	Date	Name	Norm	DIN	Nº ORDER 13.025		\Z69		Next 222

PATH: 24981A/Diagrams/01-Electrical schemes/221

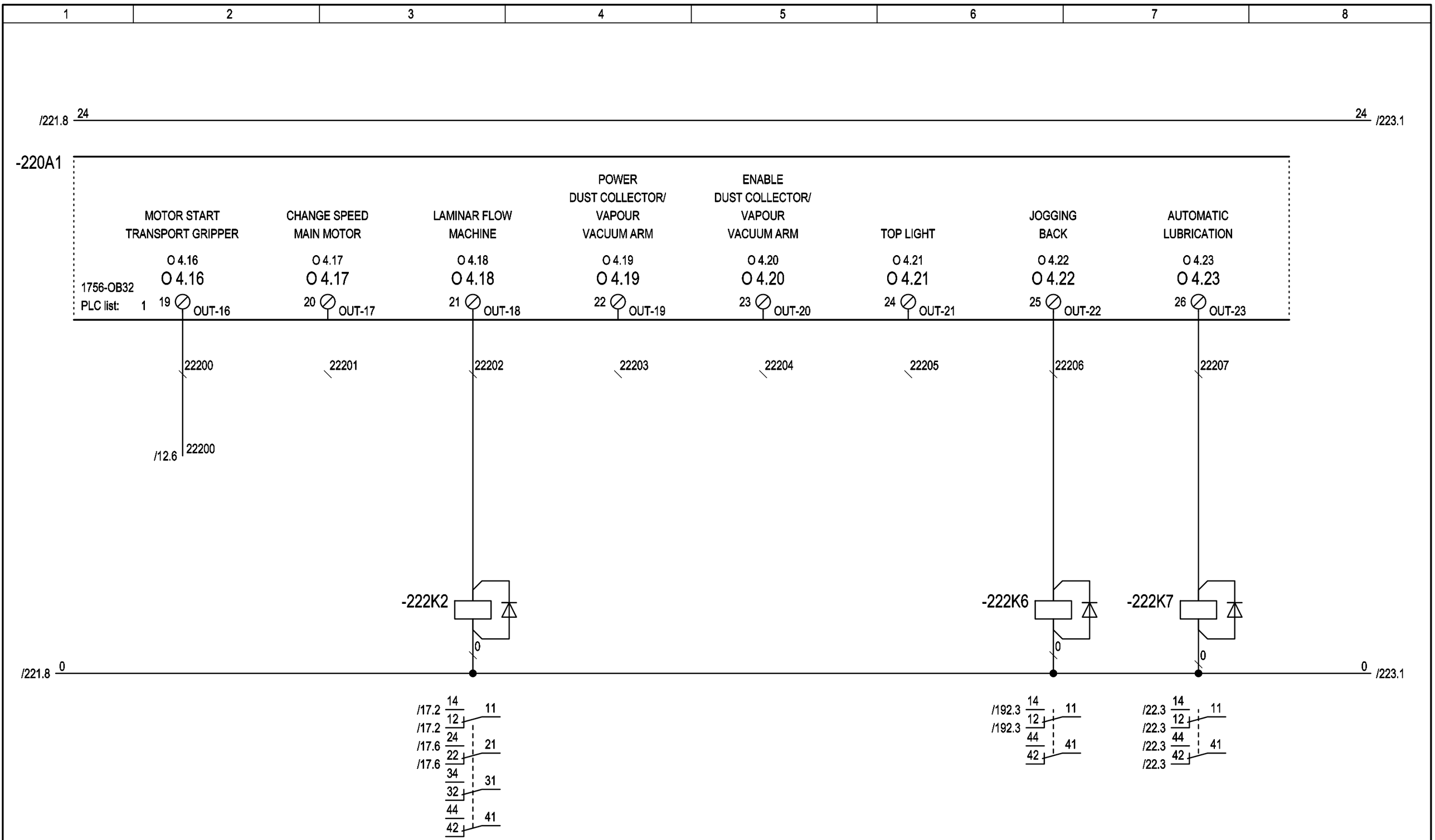

3				Date	\Z72	NURTURE, INC. (USA)	ACMAVOLPAK	TYPE OF MACHINE: SM-360 F4 WD	PLC's OUTPUTS
2				Draw.	A.LLEONART			PROJECT Nº: 24981A	
1	DIN			Print.	22.07.2014				
	Modification	Date	Name	Norm	DIN	Nº ORDER 13.025		\Z69	

=
+
Sheet 222
Next 223

PATH: 24981A/Diagrams/01-Electrical schemes/222

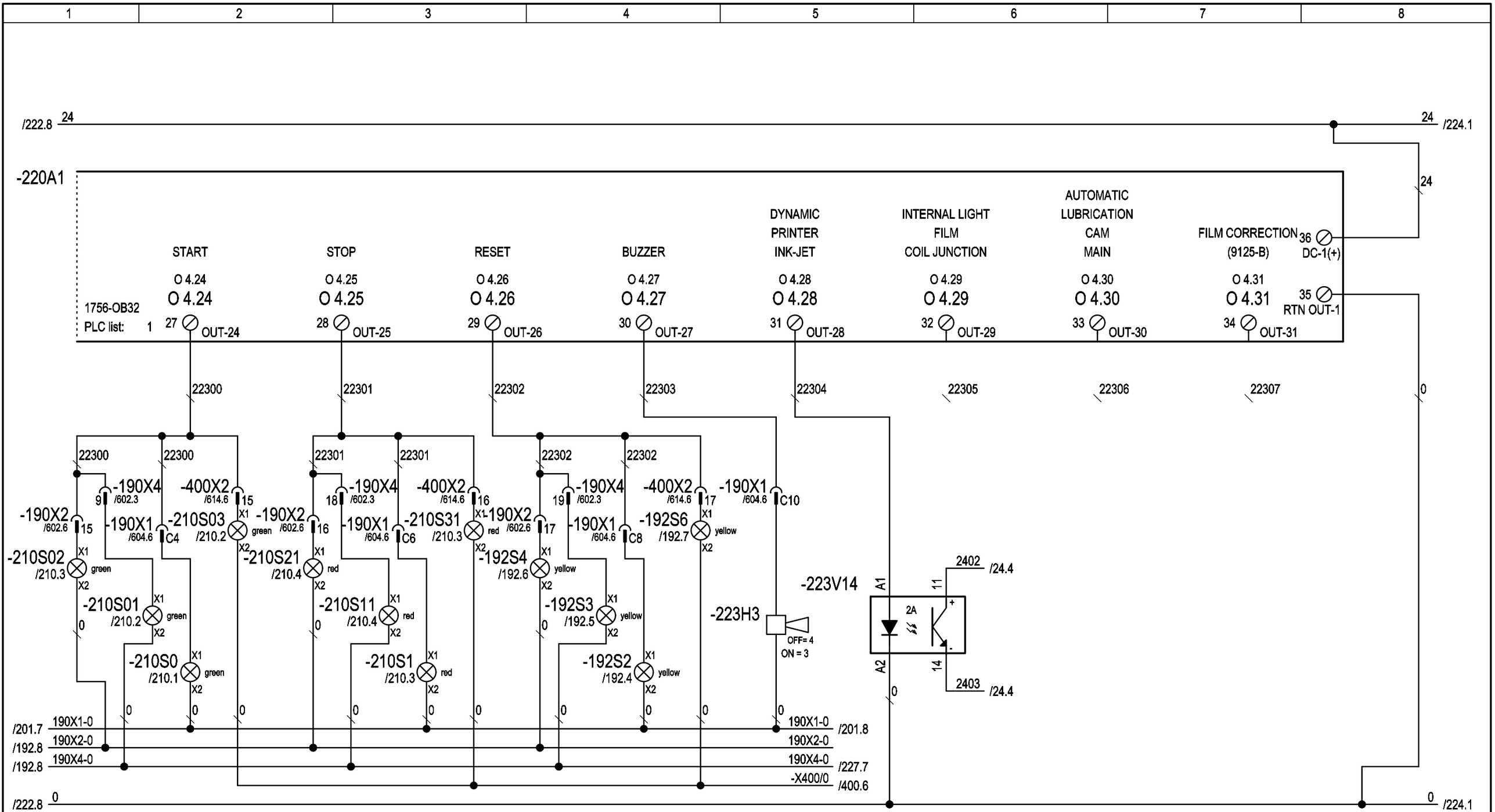

3				Date	\Z72	NURTURE, INC.	ACMAVOLPAK	TYPE OF MACHINE: SM-360 F4 WD	PLC's OUTPUTS	=
2				Draw.	A.LLEONART	(USA)		PROJECT Nº: 24981A		+
1	DIN			Print.	22.07.2014					Sheet 223
	Modification	Date	Name	Norm	DIN	Nº ORDER 13.025		\Z69		Next 224

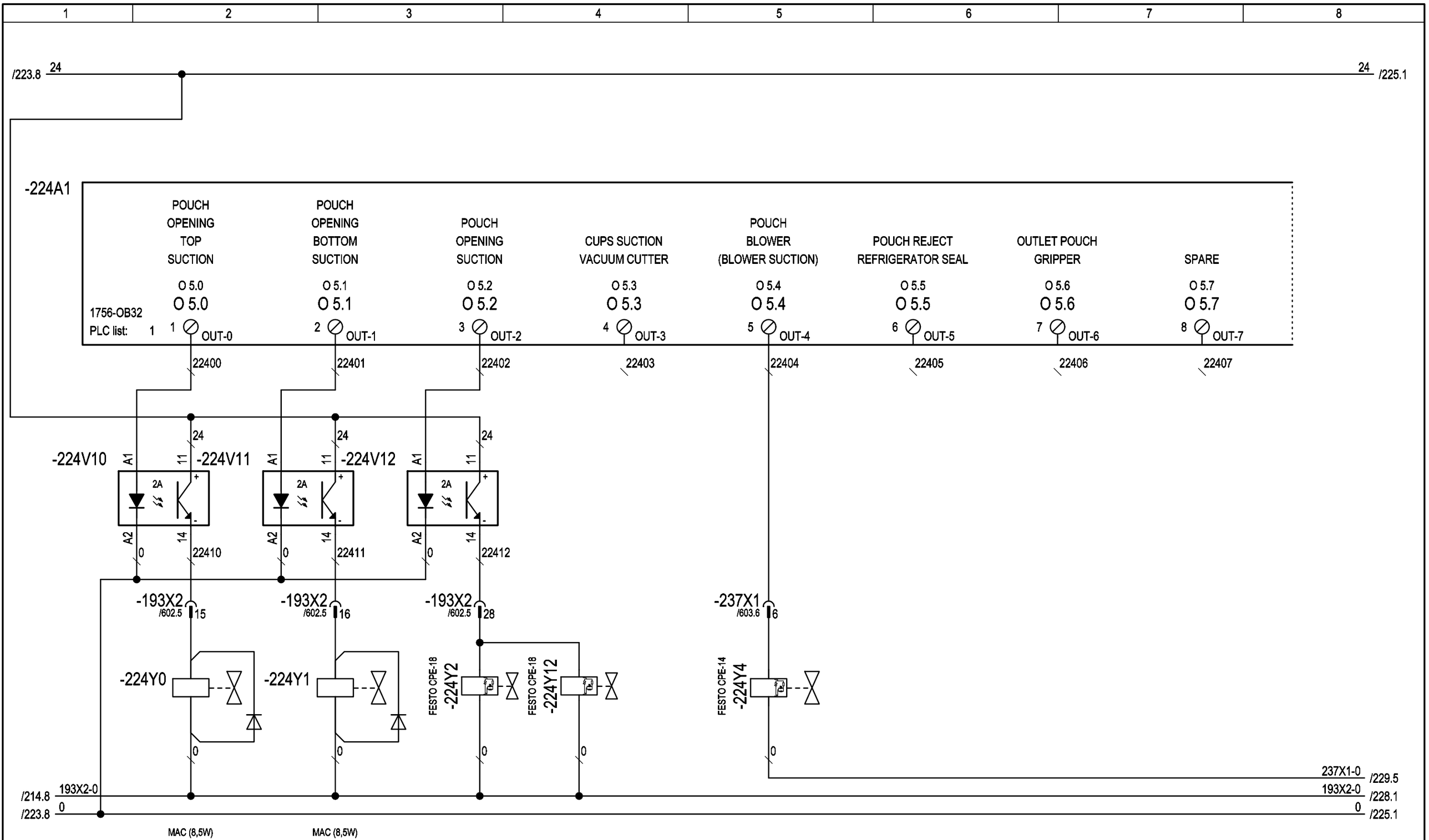

3				Date	\Z72	NURTURE, INC. (USA)	ACMAVOLPAK	TYPE OF MACHINE: SM-360 F4 WD	PLC's OUTPUTS	=
2				Draw.	A.LLEONART			PROJECT Nº: 24981A		+
1	DIN			Print.	22.07.2014					Sheet 224
	Modification	Date	Name	Norm	DIN	Nº ORDER 13.025		\Z69		Next 225

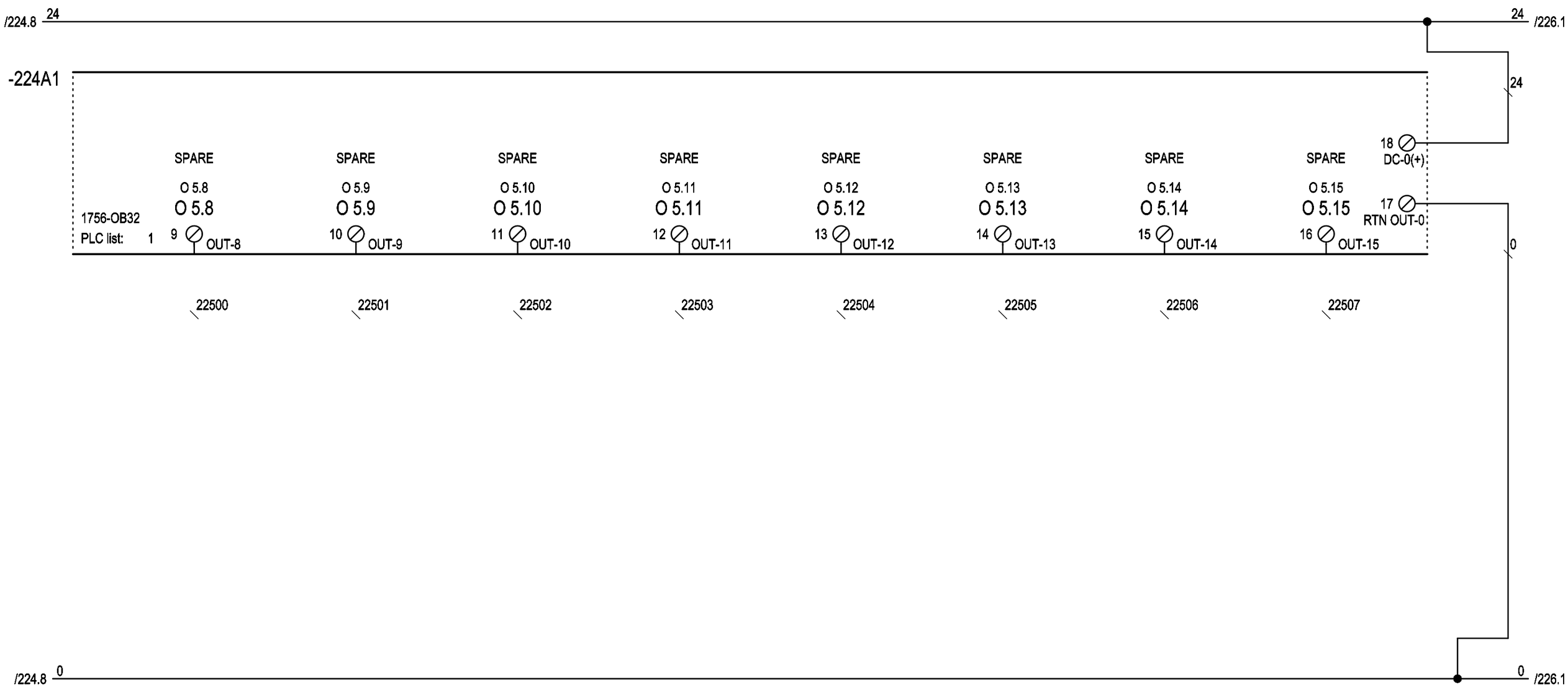

3				Date	\Z72	NURTURE, INC. (USA)	ACMAVOLPAK	TYPE OF MACHINE: SM-360 F4 WD	PLC's OUTPUTS	=
2				Draw.	A.LLEONART			PROJECT Nº: 24981A		+
1	DIN			Print.	22.07.2014					Sheet 225
	Modification	Date	Name	Norm	DIN	Nº ORDER 13.025		\Z69		Next 226

1	2	3	4	5	6	7	8

/225.8 24 — 24 /227.1

-224A1

1756-OB32
PLC list: 1

SPARE	SPARE	SPARE	SPARE	SPARE	SPARE	SPARE	SPARE
O 5.16	O 5.17	O 5.18	O 5.19	O 5.20	O 5.21	O 5.22	O 5.23
O 5.16	O 5.17	O 5.18	O 5.19	O 5.20	O 5.21	O 5.22	O 5.23
19 OUT-16	20 OUT-17	21 OUT-18	22 OUT-19	23 OUT-20	24 OUT-21	25 OUT-22	26 OUT-23
22600	22601	22602	22603	22604	22605	22606	22607

/225.8 0 — 0 /227.1

3				Date	\Z72	NURTURE, INC. (USA)	ACMAVOLPAK	TYPE OF MACHINE: SM-360 F4 WD	PLC's OUTPUTS	=
2				Draw.	A.LLEONART			PROJECT Nº: 24981A		+
1	DIN			Print.	22.07.2014					Sheet 226
	Modification	Date	Name	Norm	DIN	Nº ORDER 13.025		\Z69		Next 227

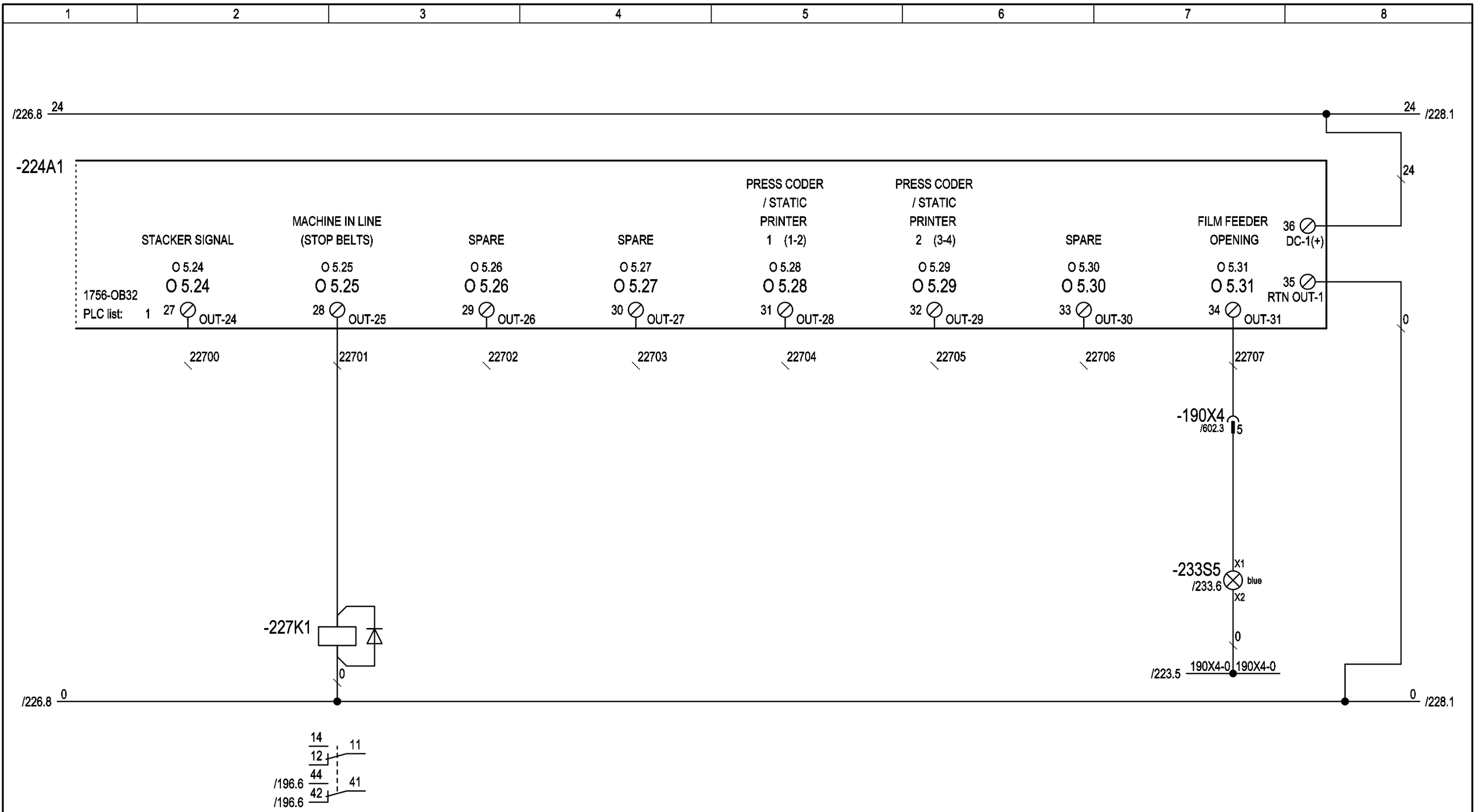

3				Date	\Z72	NURTURE, INC. (USA)	ACMAVOLPAK	TYPE OF MACHINE: SM-360 F4 WD	PLC's OUTPUTS	=
2				Draw.	A.LLEONART			PROJECT Nº: 24981A		+
1	DIN			Print.	22.07.2014					Sheet 227
	Modification	Date	Name	Norm	DIN	Nº ORDER 13.025		\Z69		Next 228

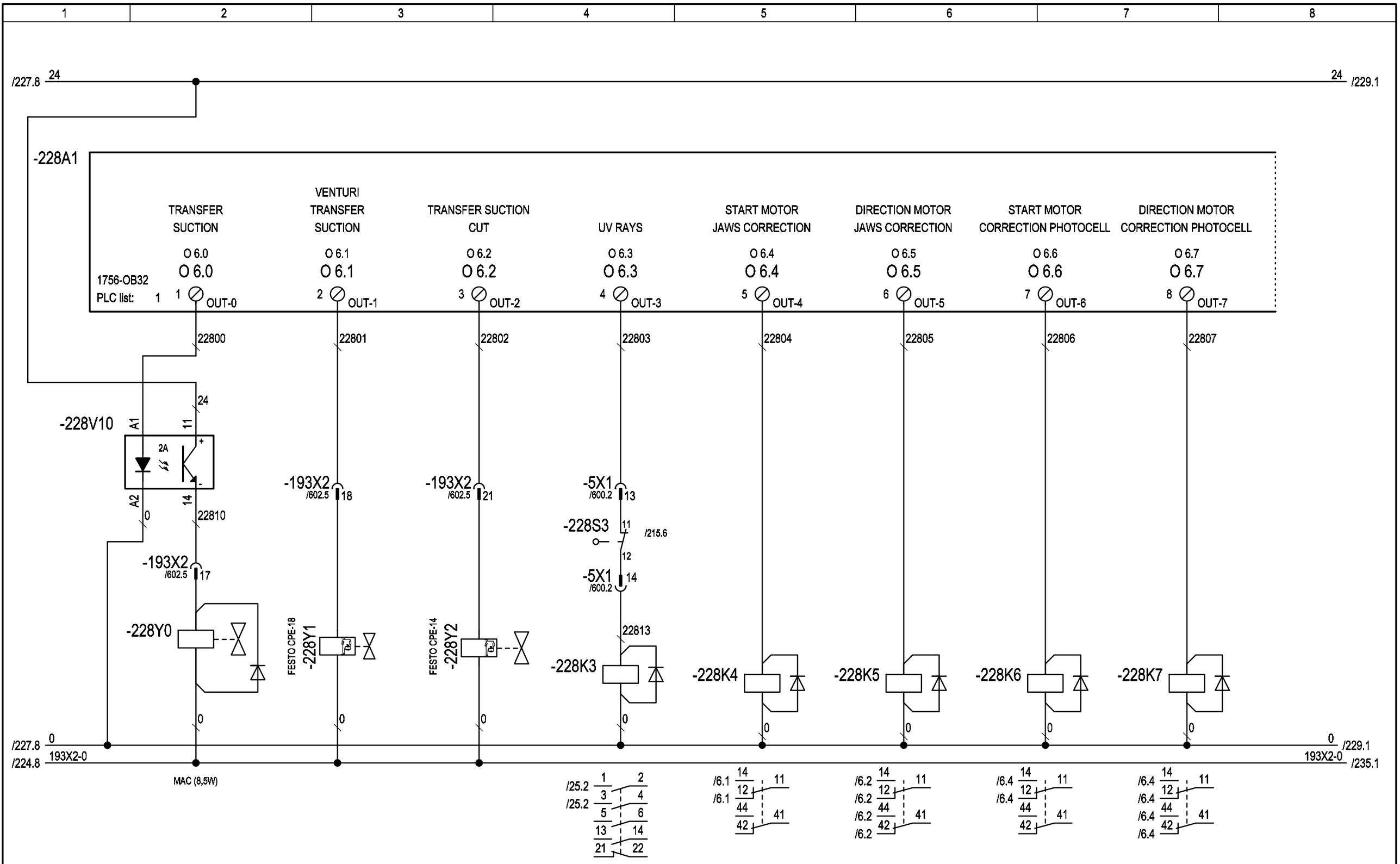

3				Date	\Z72	NURTURE, INC. (USA)	ACMAVOLPAK	TYPE OF MACHINE: SM-360 F4 WD	PLC's OUTPUTS	=
2				Draw.	A.LLEONART			PROJECT Nº: 24981A		+
1	DIN			Print.	22.07.2014					Sheet 228
	Modification	Date	Name	Norm	DIN	Nº ORDER 13.025		\Z69		Next 229

PATH: 24981A/Diagrams/01-Electrical schemes/228

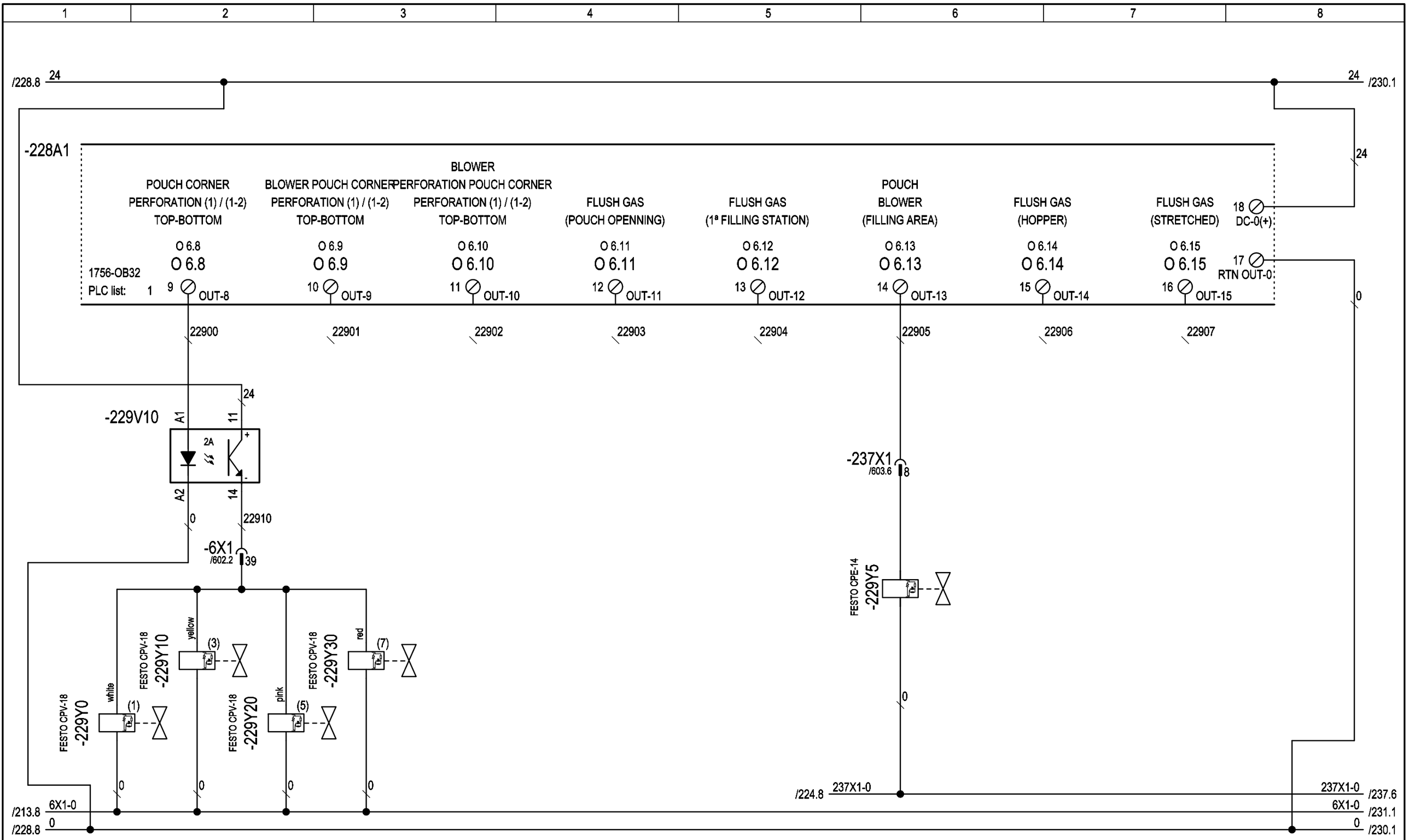

3				Date	\Z72	NURTURE, INC. (USA)	ACMAVOLPAK	TYPE OF MACHINE: SM-360 F4 WD	PLC's OUTPUTS	=
2				Draw.	A.LLEONART			PROJECT Nº: 24981A		+
1	DIN			Print.	22.07.2014					Sheet 229
	Modification	Date	Name	Norm	DIN	Nº ORDER 13.025		\Z69		Next 230

PATH: 24981A/Diagrams/01-Electrical schemes/229

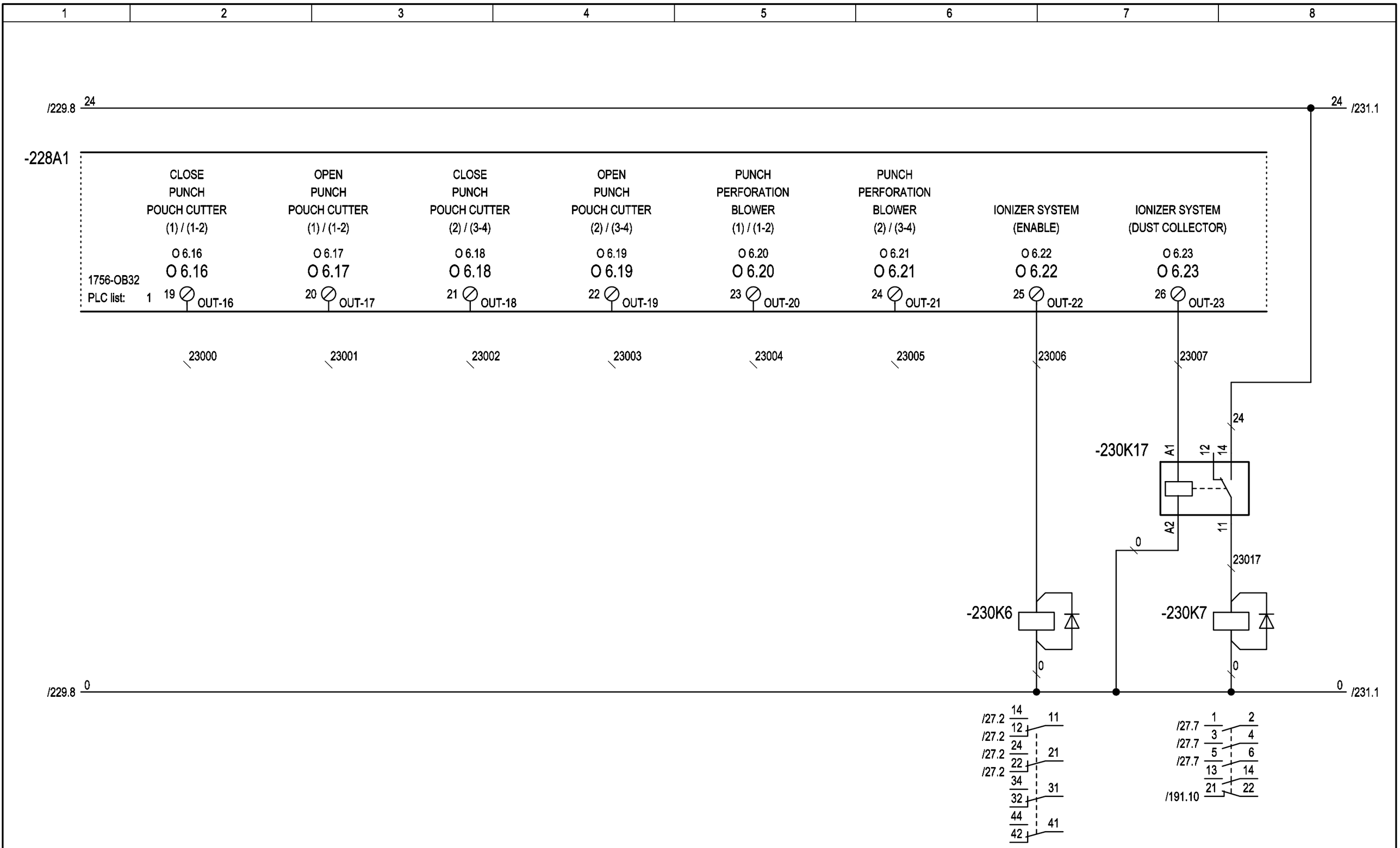

3				Date	\Z72	NURTURE, INC. (USA)	ACMAVOLPAK	TYPE OF MACHINE: SM-360 F4 WD	PLC's OUTPUTS	=
2				Draw.	A.LLEONART			PROJECT Nº: 24981A		+
1	DIN			Print.	22.07.2014					Sheet 230
	Modification	Date	Name	Norm	DIN	Nº ORDER 13.025		\Z69		Next 231

PATH: 24981A/Diagrams/01-Electrical schemes/230

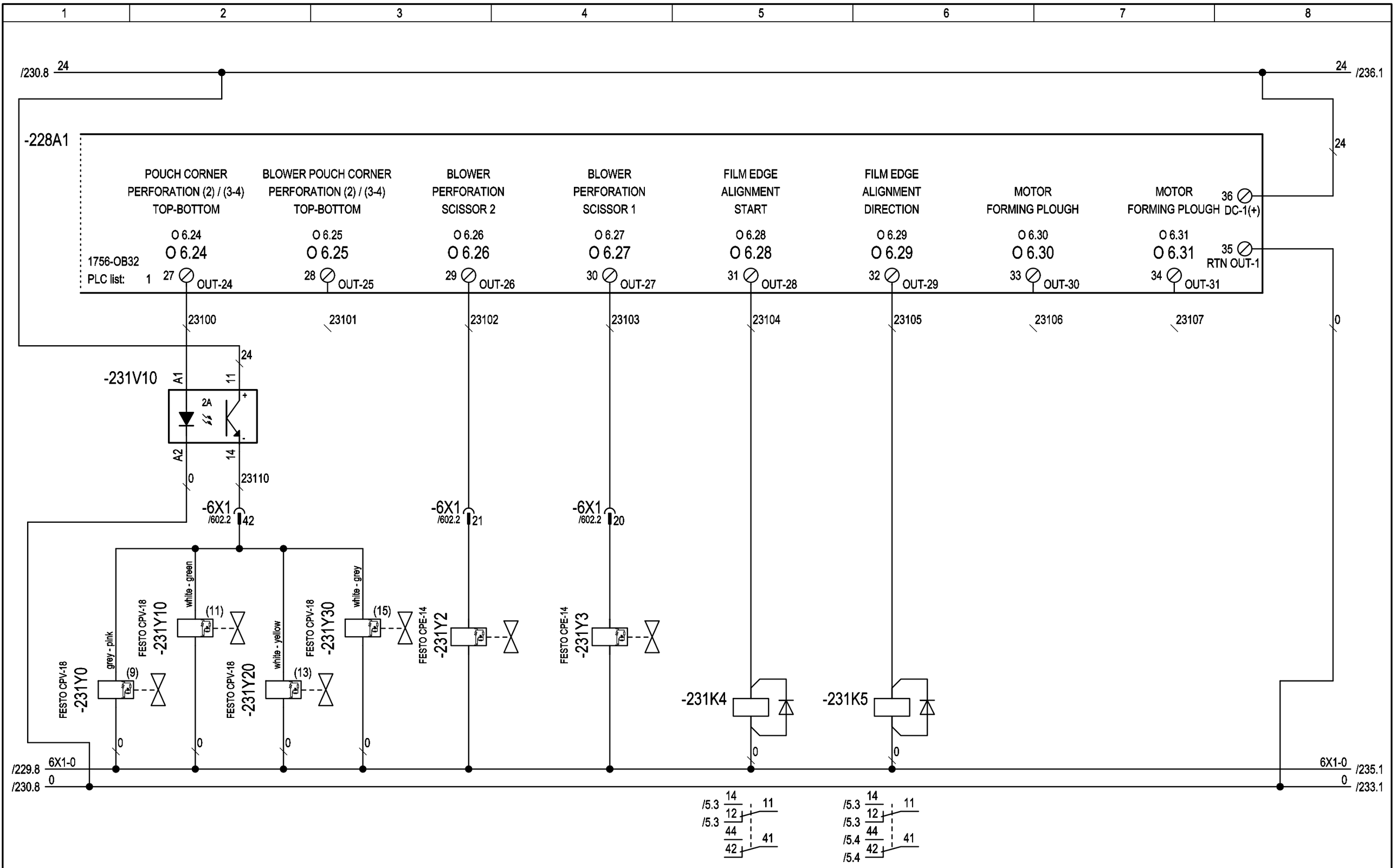

3				Date	\Z72	NURTURE, INC. (USA)	ACMAVOLPAK	TYPE OF MACHINE: SM-360 F4 WD	PLC's OUTPUTS
2				Draw.	A.LLEONART			PROJECT Nº: 24981A	
1	DIN			Print.	22.07.2014				
	Modification	Date	Name	Norm	DIN	Nº ORDER 13.025		\Z69	

=
+
Sheet 231
Next 232

PATH: 24981A/Diagrams/01-Electrical schemes/231

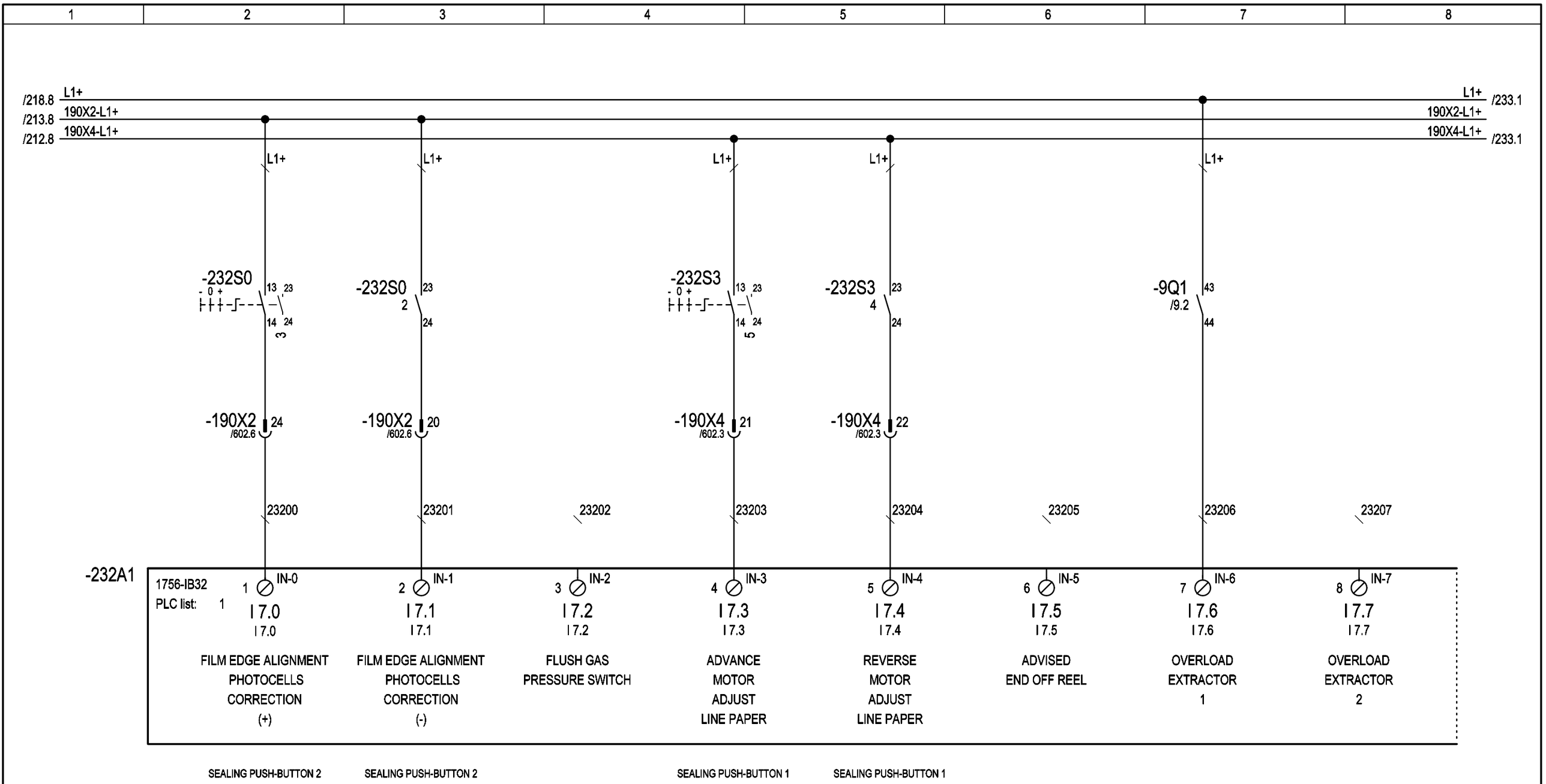

3				Date	\Z72	NURTURE, INC. (USA)	ACMAVOLPAK	TYPE OF MACHINE: SM-360 F4 WD	PLC's INPUTS	=
2				Draw.	A.LLEONART			PROJECT Nº: 24981A		+
1	DIN			Print.	22.07.2014					Sheet 232
	Modification	Date	Name	Norm	DIN	Nº ORDER 13.025		\Z69		Next 233

PATH: 24981A/Diagrams/01-Electrical schemes/232

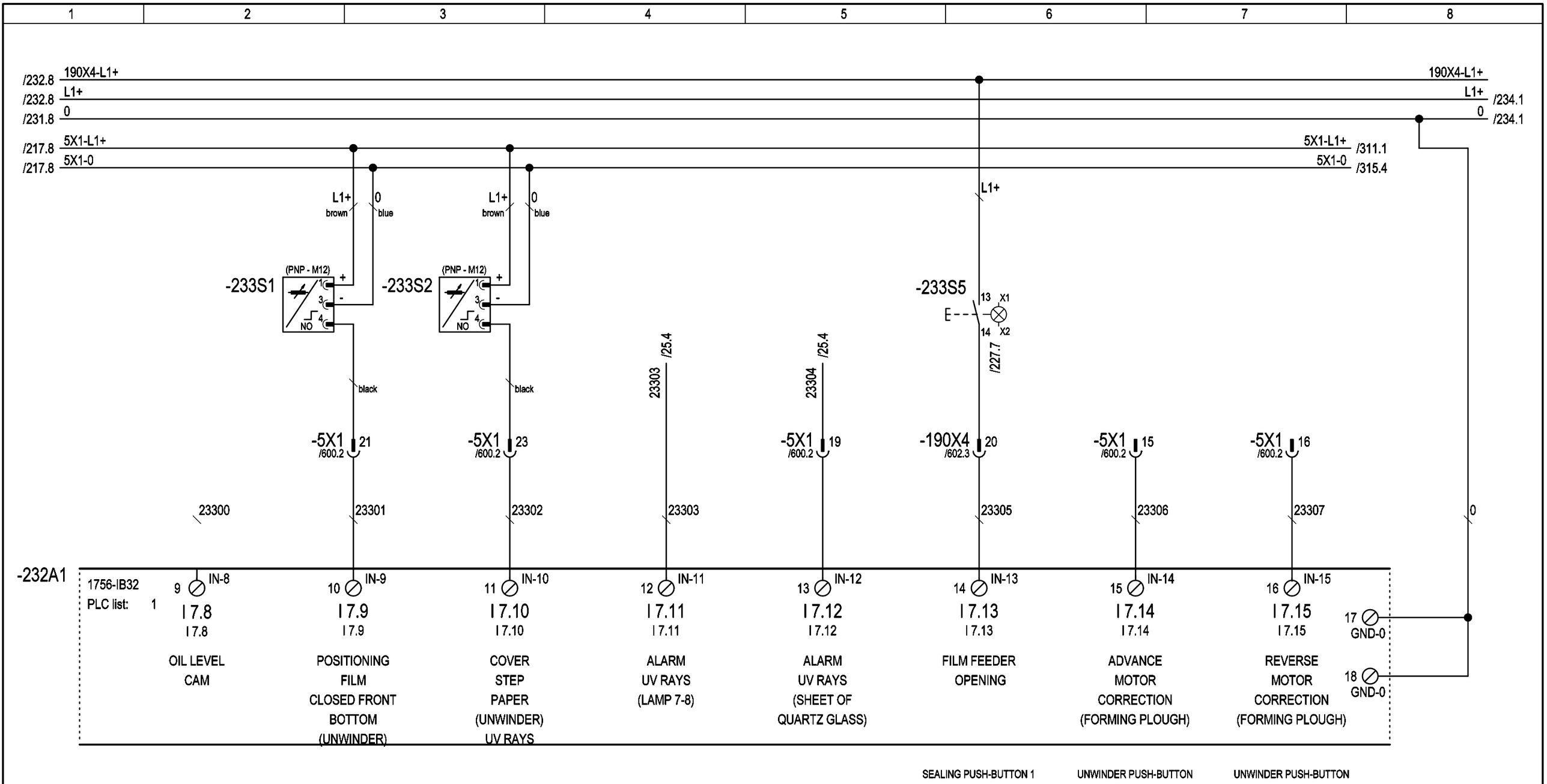

3				Date	\Z72	NURTURE, INC. (USA)	ACMAVOLPAK	TYPE OF MACHINE: SM-360 F4 WD	PLC's INPUTS	=
2				Draw.	A.LLEONART			PROJECT Nº: 24981A		+
1	DIN			Print.	22.07.2014					Sheet 233
	Modification	Date	Name	Norm	DIN	Nº ORDER 13.025		\Z69		Next 234

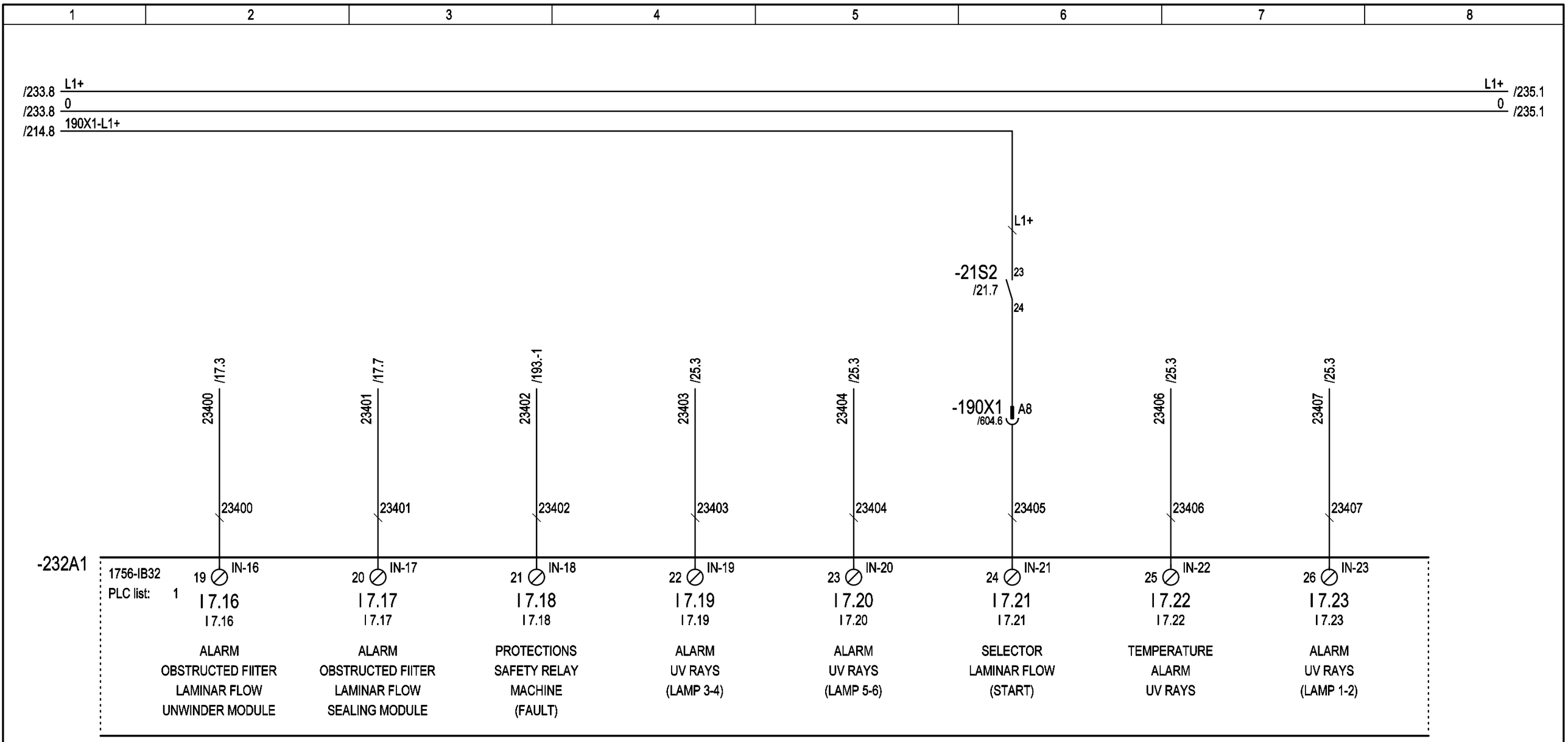

3				Date	\Z72	NURTURE, INC. (USA)	ACMAVOLPAK	TYPE OF MACHINE: SM-360 F4 WD	PLC's INPUTS	=
2				Draw.	A.LLEONART			PROJECT Nº: 24981A		+
1	DIN			Print.	22.07.2014					Sheet 234
	Modification	Date	Name	Norm	DIN	Nº ORDER 13.025		\Z69		Next 235

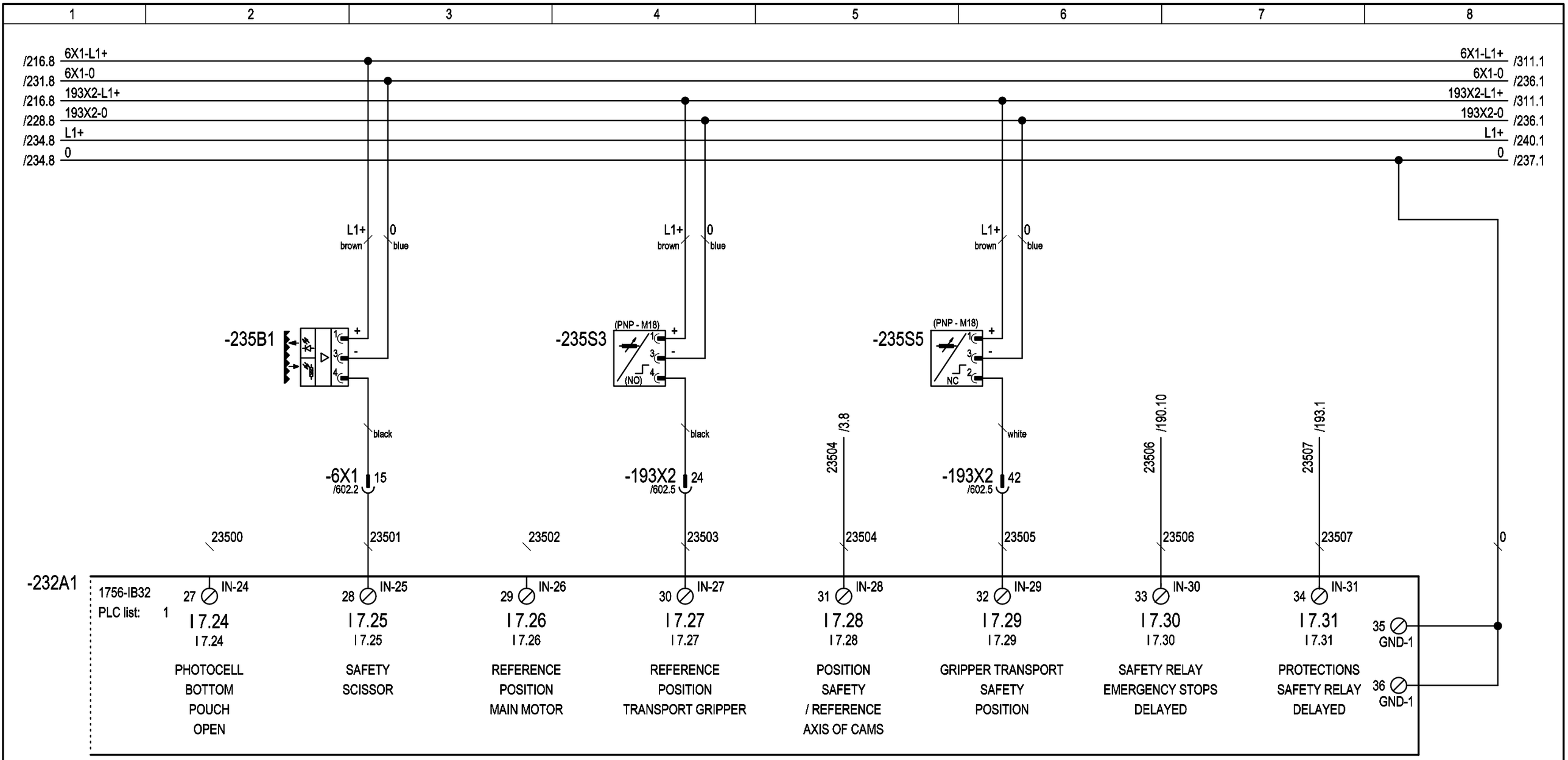

3				Date	\Z72	NURTURE, INC. (USA)	ACMAVOLPAK	TYPE OF MACHINE: SM-360 F4 WD	PLC's INPUTS	=
2				Draw.	A.LLEONART			PROJECT Nº: 24981A		+
1	DIN			Print.	22.07.2014					Sheet 235
	Modification	Date	Name	Norm	DIN	Nº ORDER 13.025		\Z69		Next 236

1	2	3	4	5	6	7	8

/231.8 24 — 24 /237.1

-236A1

1756-OB32
PLC list: 1

	SYNCHRONISM (RESET)	SYNCHRONISM (READY)	SYNCHRONISM (CYCLE AUTOMATIC)	COMPENSATOR BOTTOM (COIL END) (320S3)	SPARE	SPARE	SPARE	SPARE
	O 8.0	O 8.1	O 8.2	O 8.3	O 8.4	O 8.5	O 8.6	O 8.7
	O 8.0	O 8.1	O 8.2	O 8.3	O 8.4	O 8.5	O 8.6	O 8.7
	1 OUT-0	2 OUT-1	3 OUT-2	4 OUT-3	5 OUT-4	6 OUT-5	7 OUT-6	8 OUT-7
	23600	23601	23602	23603	23604	23605	23606	23607
	/530.4 23600	/530.4 23601	/530.5 23602	/530.6 23603				

/235.8 6X1-0 — 6X1-0

/235.8 193X2-0 — 193X2-0 /366.1

3				Date	\Z72	NURTURE, INC. (USA)	ACMAVOLPAK	TYPE OF MACHINE: SM-360 F4 WD	PLC's OUTPUTS	=
2				Draw.	A.LLEONART			PROJECT Nº: 24981A		+
1	DIN			Print.	22.07.2014					Sheet 236
	Modification	Date	Name	Norm	DIN	Nº ORDER 13.025		\Z69		Next 237

PATH: 24981A/Diagrams/01-Electrical schemes/236

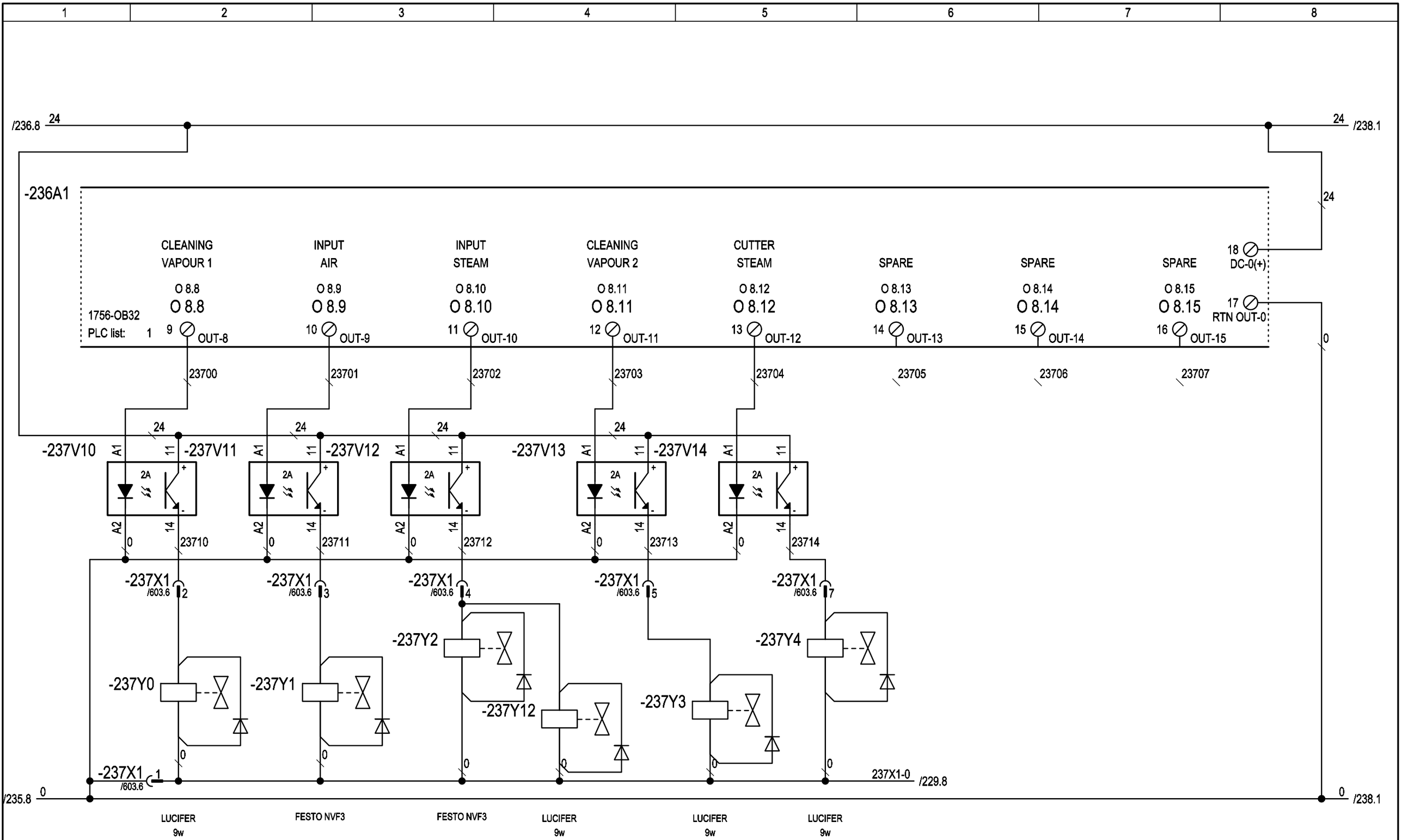

3				Date	\Z72	NURTURE, INC. (USA)	ACMAVOLPAK	TYPE OF MACHINE: SM-360 F4 WD	PLC's OUTPUTS	=
2				Draw.	A.LLEONART			PROJECT Nº: 24981A		+
1	DIN			Print.	22.07.2014					Sheet 237
	Modification	Date	Name	Norm	DIN	Nº ORDER 13.025		\Z69		Next 238

PATH: 24981A/Diagrams/01-Electrical schemes/237

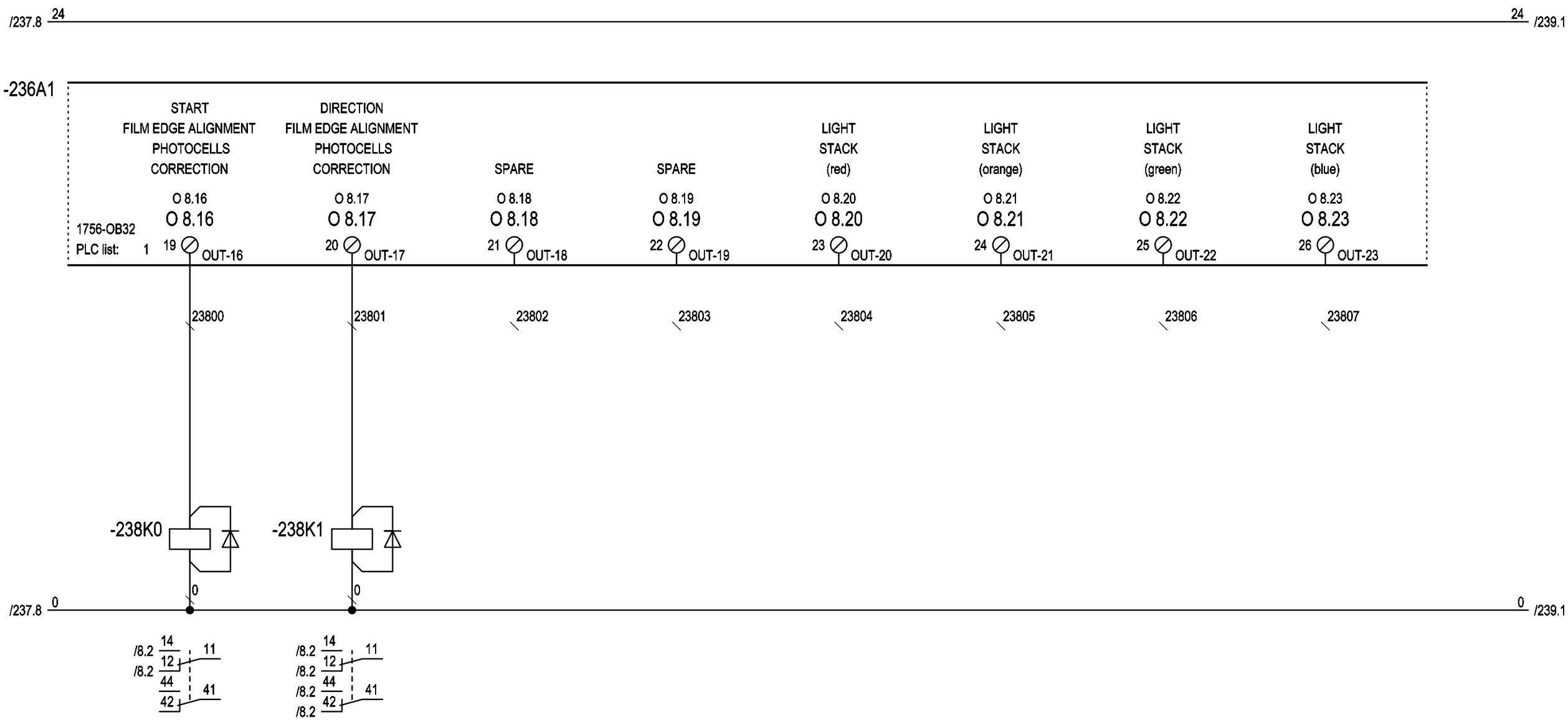

3				Date	\Z72	NURTURE, INC. (USA)	ACMAVOLPAK	TYPE OF MACHINE: SM-360 F4 WD	PLC's OUTPUTS	=
2				Draw.	A.LLEONART			PROJECT Nº: 24981A		+
1	DIN			Print.	22.07.2014					Sheet 238
	Modification	Date	Name	Norm	DIN	Nº ORDER 13.025		\Z69		Next 239

PATH: 24981A/Diagrams/01-Electrical schemes/238

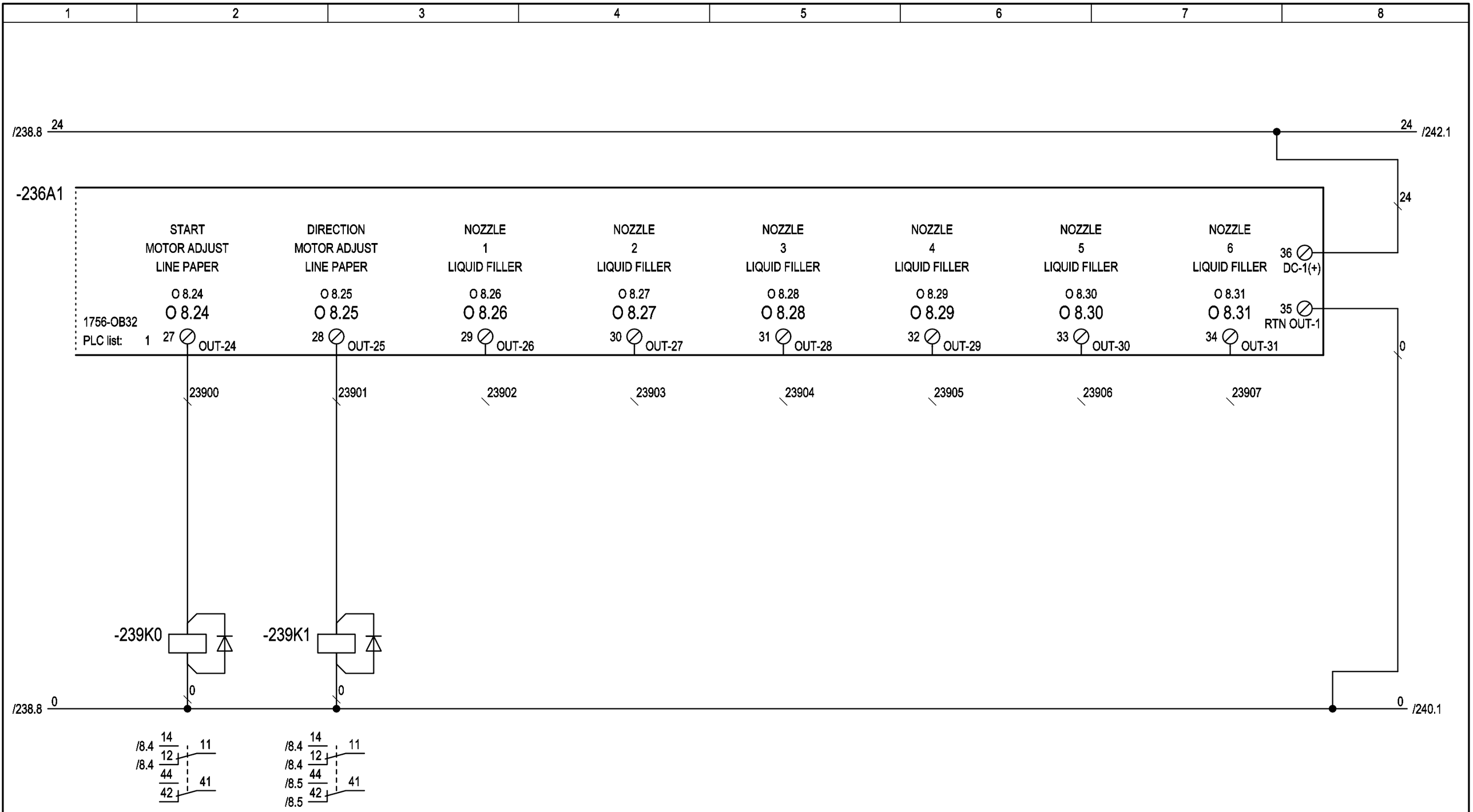

3				Date	\Z72	NURTURE, INC. (USA)	ACMAVOLPAK	TYPE OF MACHINE: SM-360 F4 WD	PLC's OUTPUTS	=
2				Draw.	A.LLEONART			PROJECT Nº: 24981A		+
1	DIN			Print.	22.07.2014					Sheet 239
	Modification	Date	Name	Norm	DIN	Nº ORDER 13.025		\Z69		Next 240

PATH: 24981A/Diagrams/01-Electrical schemes/239

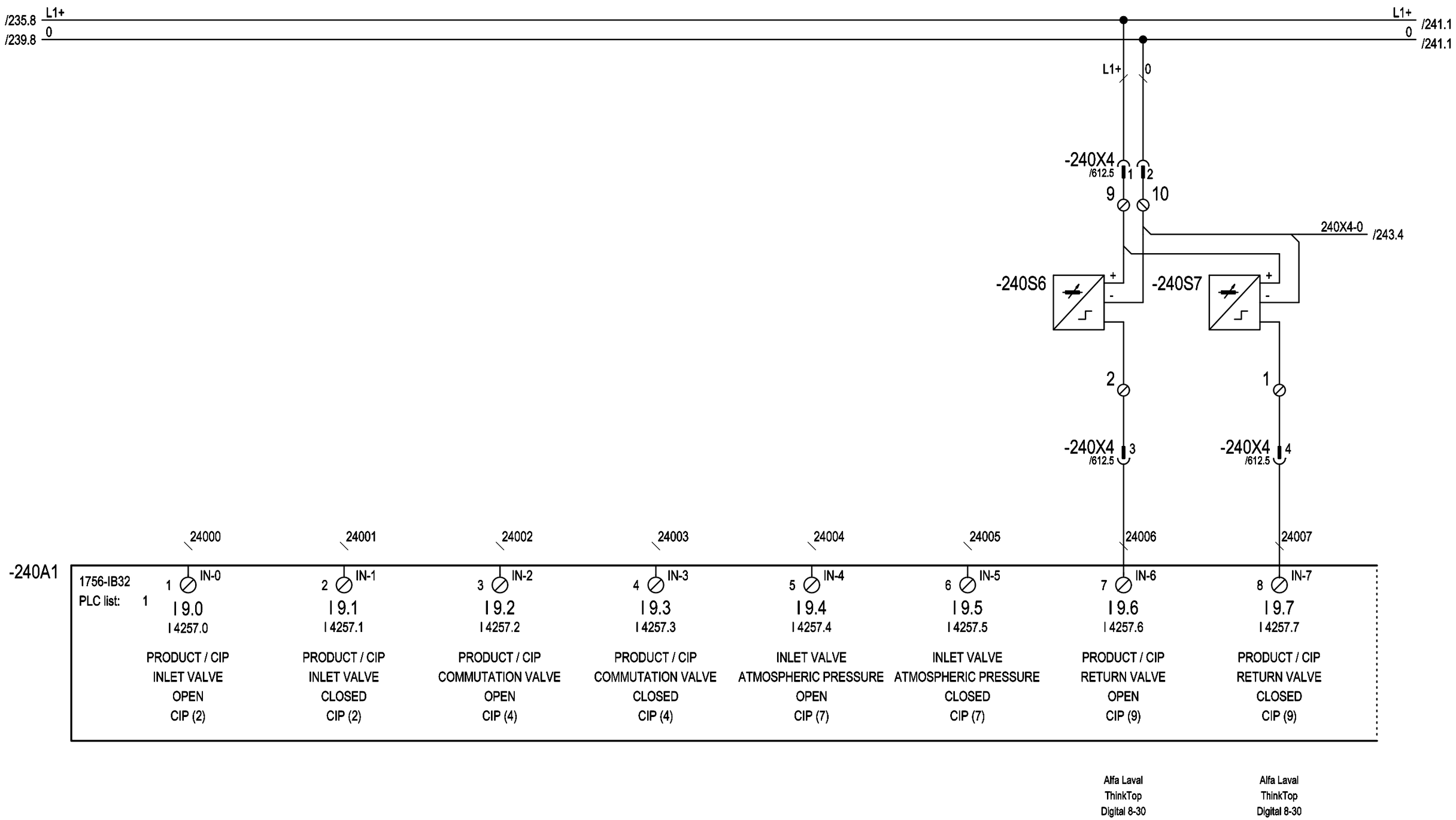

3				Date	\Z72	NURTURE, INC. (USA)	ACMAVOLPAK	TYPE OF MACHINE: SM-360 F4 WD	PLC's INPUTS LIQUID FILLER MAS-734	=	
2				Draw.	A.LLEONART			PROJECT Nº: 24981A		+	
1	DIN			Print.	22.07.2014					Sheet 240	
	Modification	Date	Name	Norm	DIN	Nº ORDER 13.025		\Z69		Next 241	

PATH: 24981A/Diagrams/01-Electrical schemes/240

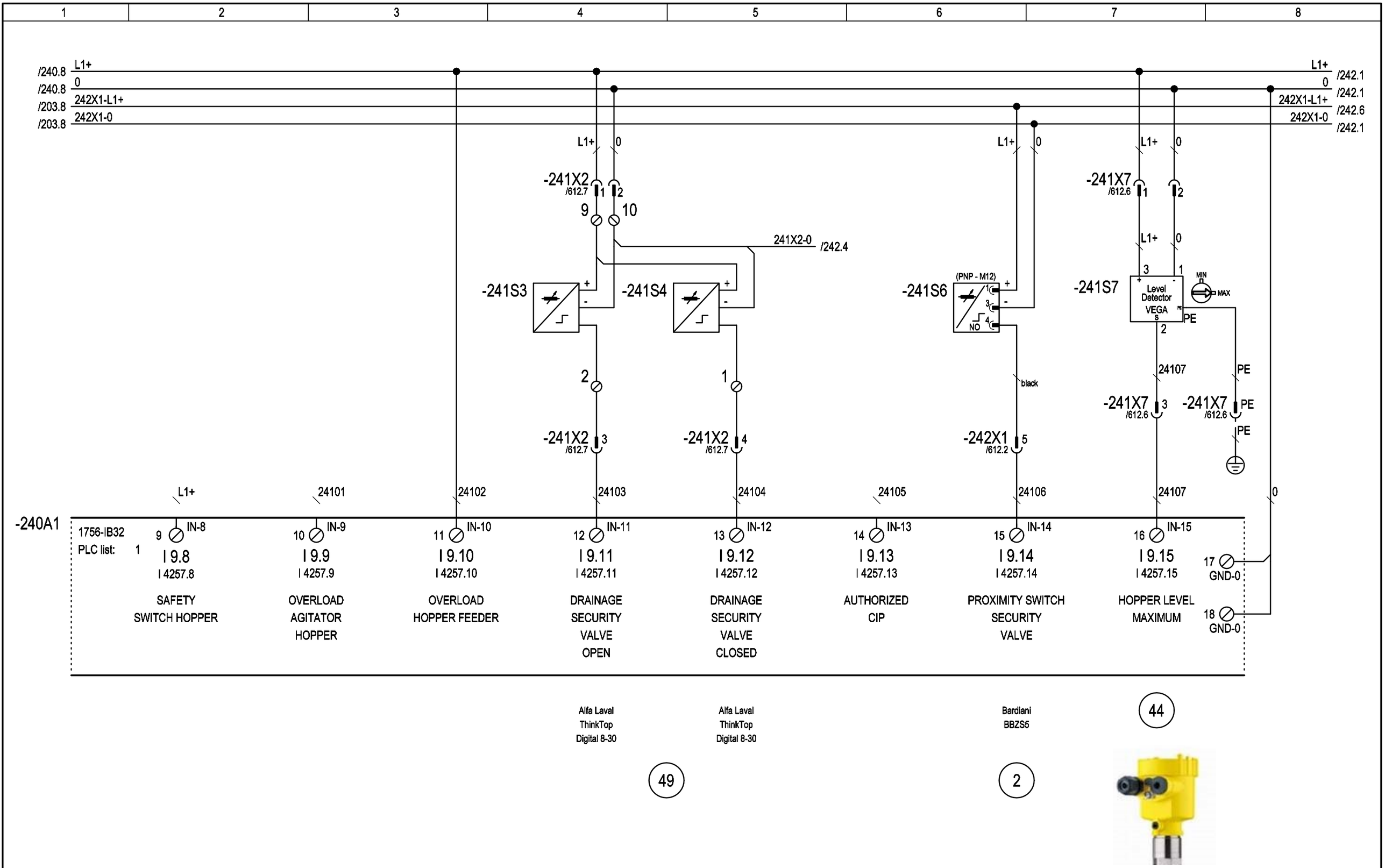

3				Date	\Z72	NURTURE, INC. (USA)	ACMAVOLPAK	TYPE OF MACHINE: SM-360 F4 WD	PLC's INPUTS LIQUID FILLER MAS-734	=	
2				Draw.	A.LLEONART			PROJECT Nº: 24981A		+	
1	DIN			Print.	22.07.2014					Sheet 241	
	Modification	Date	Name	Norm	DIN	Nº ORDER 13.025		\Z69		Next 242	

PATH: 24981A/Diagrams/01-Electrical schemes/241

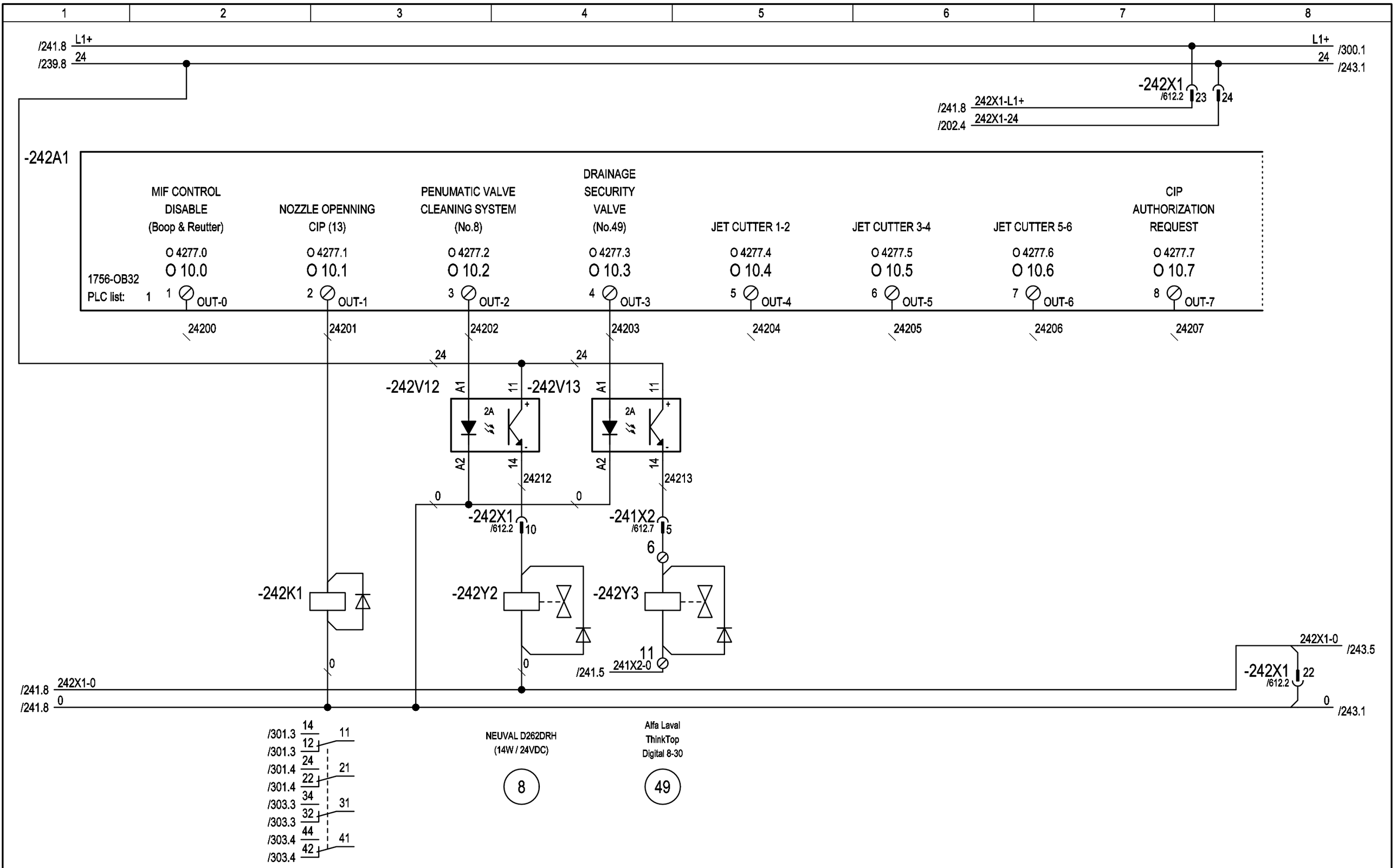

3				Date	\Z72	NURTURE, INC. (USA)	ACMAVOLPAK	TYPE OF MACHINE: SM-360 F4 WD	PLC's OUTPUTS LIQUID FILLER MAS-734	=	
2				Draw.	A.LLEONART			PROJECT Nº: 24981A		+	
1	DIN			Print.	22.07.2014					Sheet 242	
	Modification	Date	Name	Norm	DIN	Nº ORDER 13.025		\Z69		Next 243	

PATH: 24981A/Diagrams/01-Electrical schemes/242

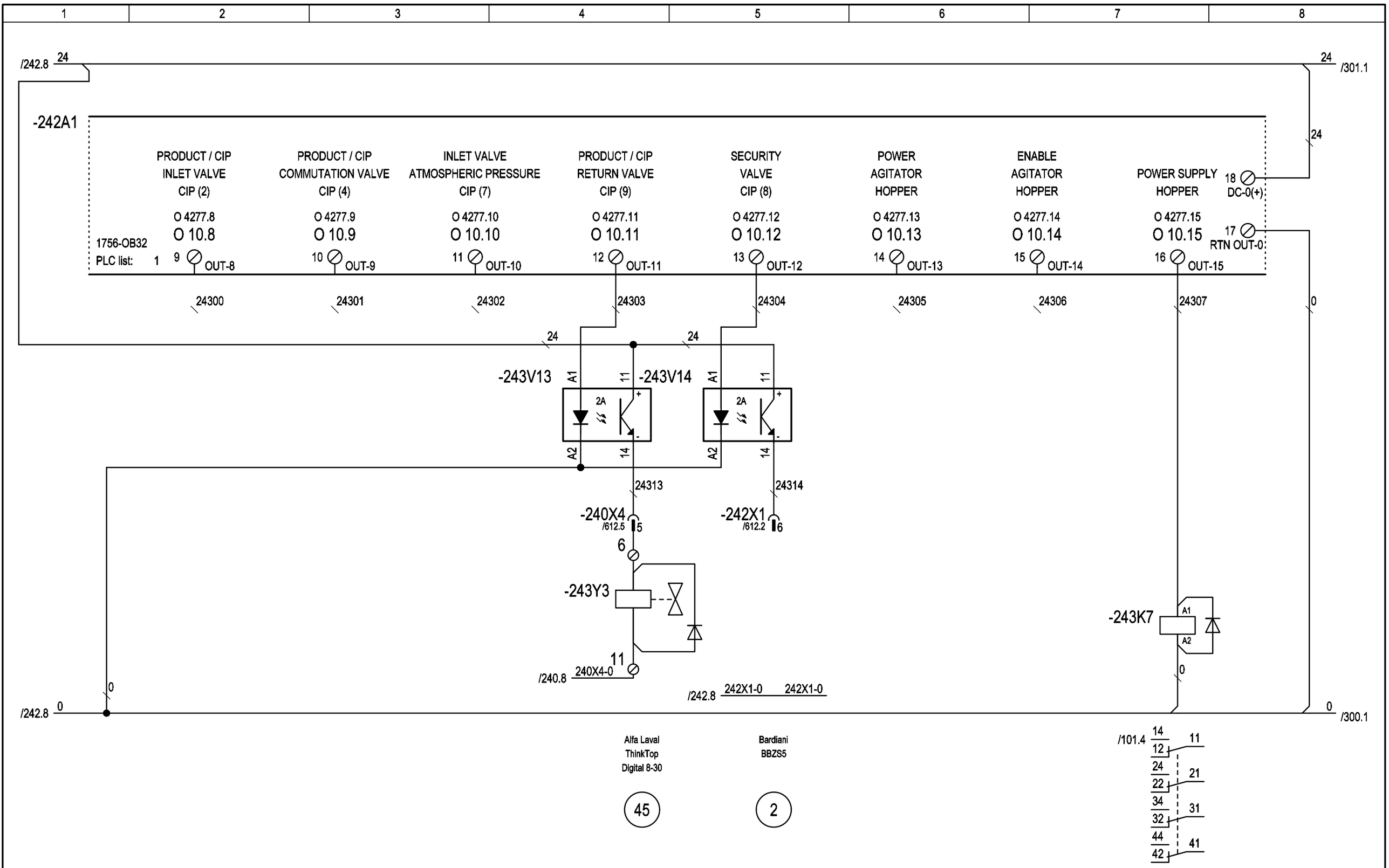

3				Date	\Z72	NURTURE, INC. (USA)	ACMAVOLPAK	TYPE OF MACHINE: SM-360 F4 WD	PLC's OUTPUTS LIQUID FILLER MAS-734	=	
2				Draw.	A.LLEONART			PROJECT Nº: 24981A		+	
1	DIN			Print.	22.07.2014					Sheet 243	
	Modification	Date	Name	Norm	DIN	Nº ORDER 13.025		\Z69		Next 300	

PATH: 24981A/Diagrams/01-Electrical schemes/243

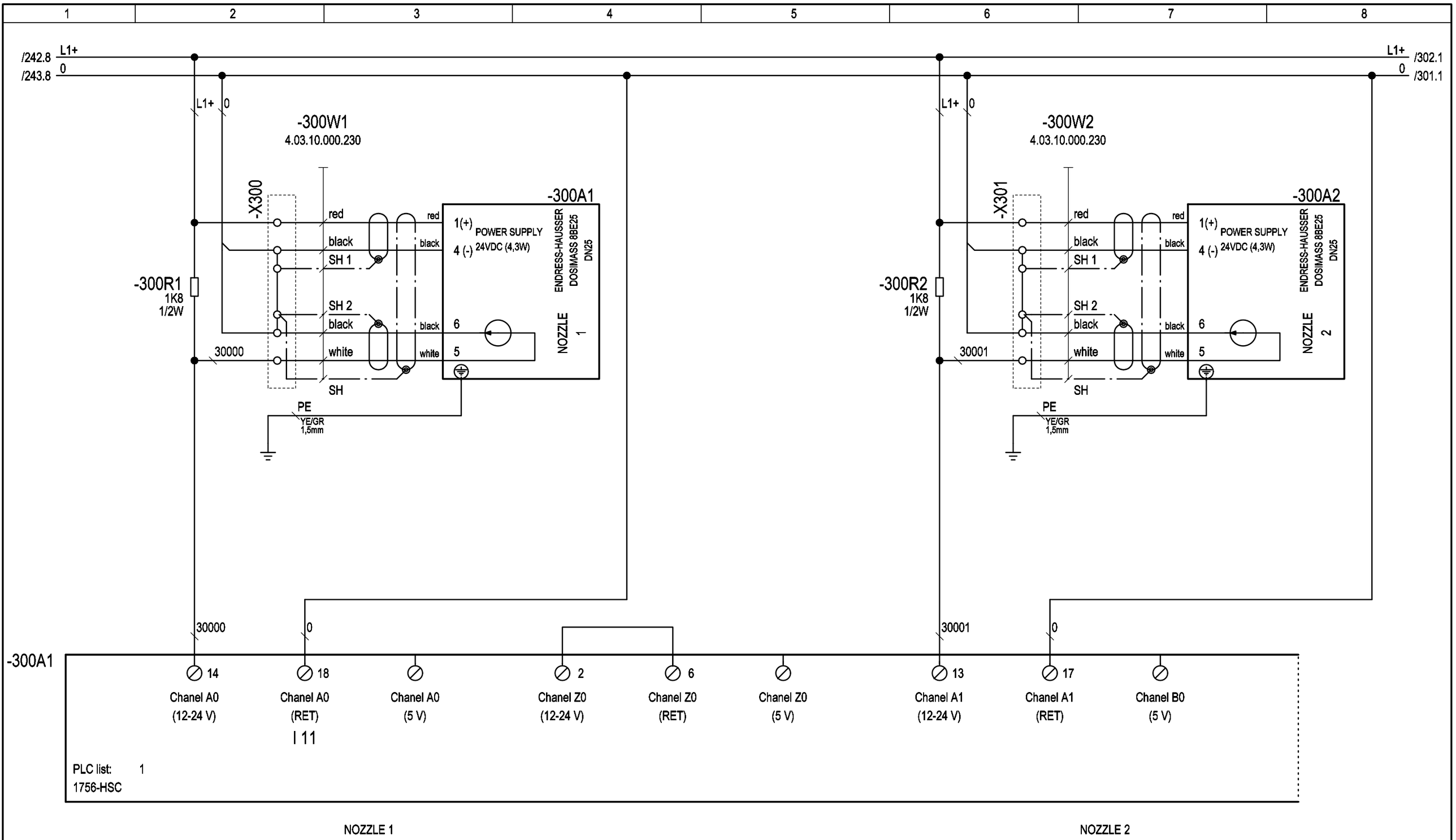

3				Date	\Z72	NURTURE, INC.	ACMAVOLPAK	TYPE OF MACHINE: SM-360 F4 WD	FILLER'S COUNTERS	=
2				Draw.	A.LLEONART	(USA)		PROJECT Nº: 24981A	LIQUID FILLER MAS-734	+
1	DIN			Print.	22.07.2014					Sheet 300
	Modification	Date	Name	Norm	DIN	Nº ORDER 13.025		\Z69		Next 301

PATH: 24981A/Diagrams/01-Electrical schemes/300

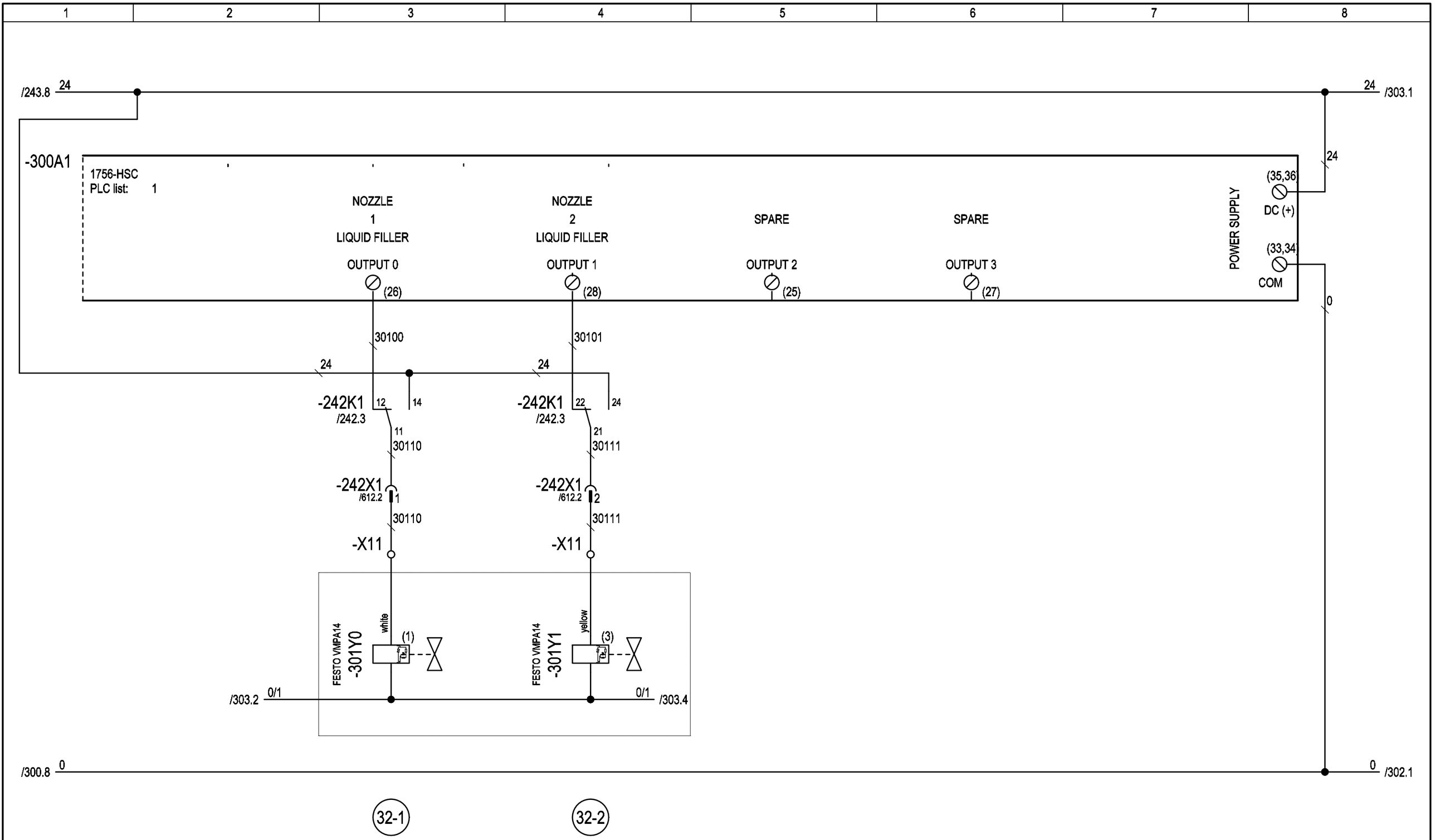

3				Date	\Z72	NURTURE, INC.	ACMAVOLPAK	TYPE OF MACHINE: SM-360 F4 WD	FILLER'S COUNTERS	=	
2				Draw.	A.LLEONART	(USA)		PROJECT Nº: 24981A	LIQUID FILLER MAS-734	+	
1	DIN			Print.	22.07.2014					Sheet 301	
	Modification	Date	Name	Norm	DIN	Nº ORDER 13.025		\Z69		Next 302	

PATH: 24981A/Diagrams/01-Electrical schemes/301

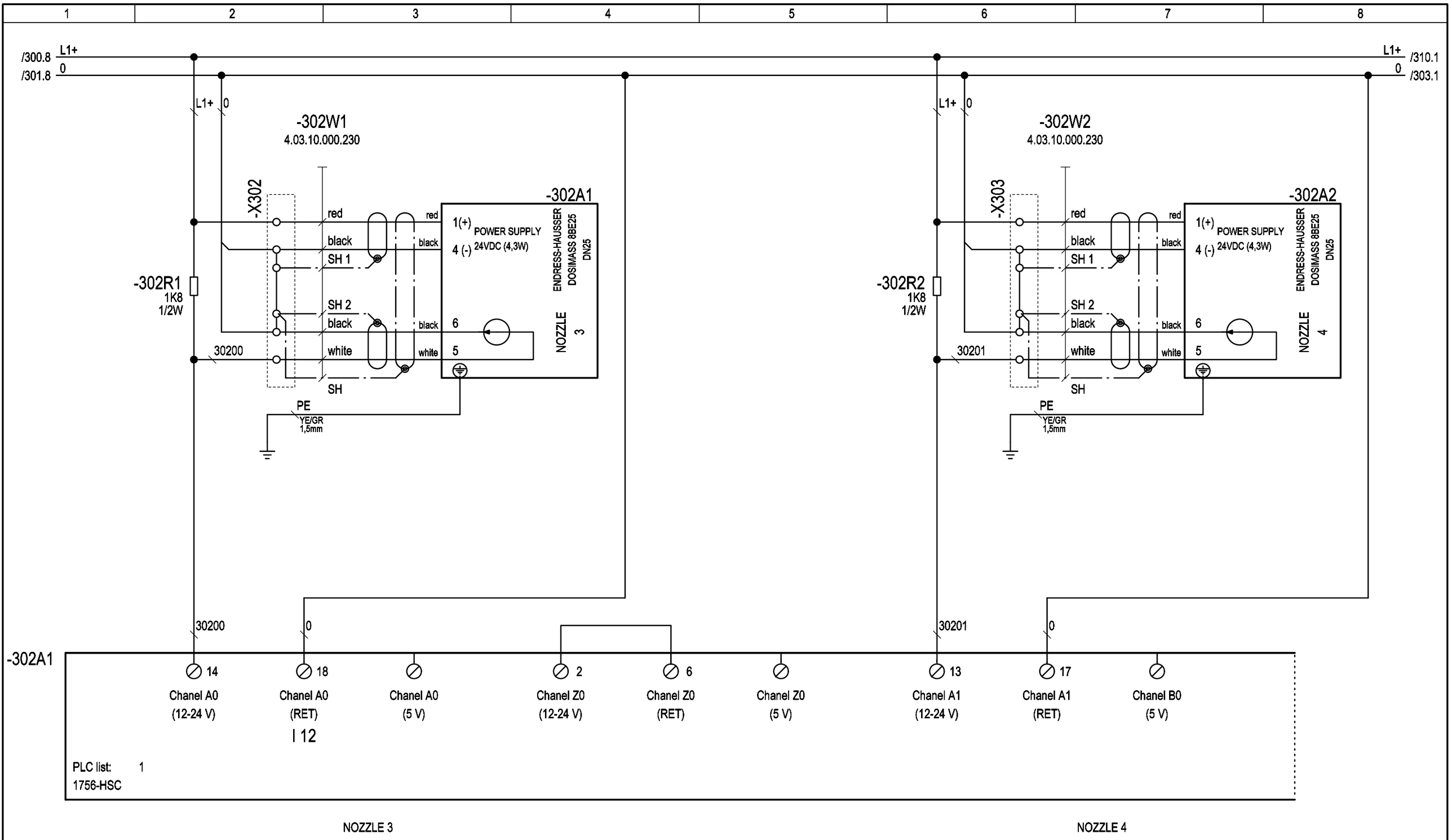

3				Date	\Z72	NURTURE, INC. (USA)	ACMAVOLPAK	TYPE OF MACHINE: SM-360 F4 WD	FILLER'S COUNTERS LIQUID FILLER MAS-734	=
2				Draw.	A.LLEONART			PROJECT Nº: 24981A		+
1	DIN			Print.	22.07.2014					Sheet 302
	Modification	Date	Name	Norm	DIN	Nº ORDER 13.025		\Z69		Next 303

PATH: 24981A/Diagrams/01-Electrical schemes/302

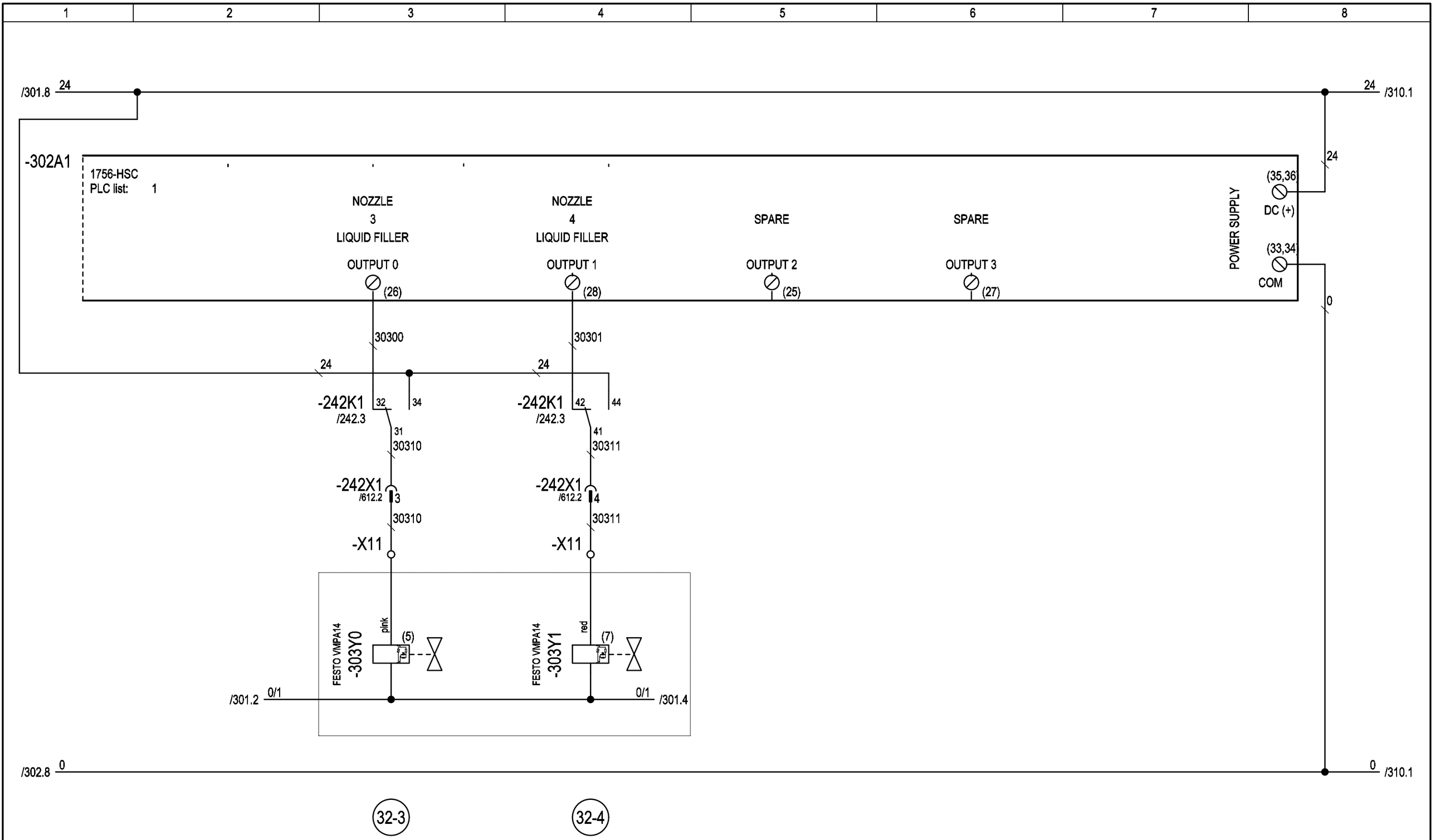

3				Date	\Z72	NURTURE, INC. (USA)	ACMAVOLPAK	TYPE OF MACHINE: SM-360 F4 WD	FILLER'S COUNTERS LIQUID FILLER MAS-734	=
2				Draw.	A.LLEONART			PROJECT Nº: 24981A		+
1	DIN			Print.	22.07.2014					Sheet 303
	Modification	Date	Name	Norm	DIN	Nº ORDER 13.025		\Z69		Next 310

PATH: 24981A/Diagrams/01-Electrical schemes/303

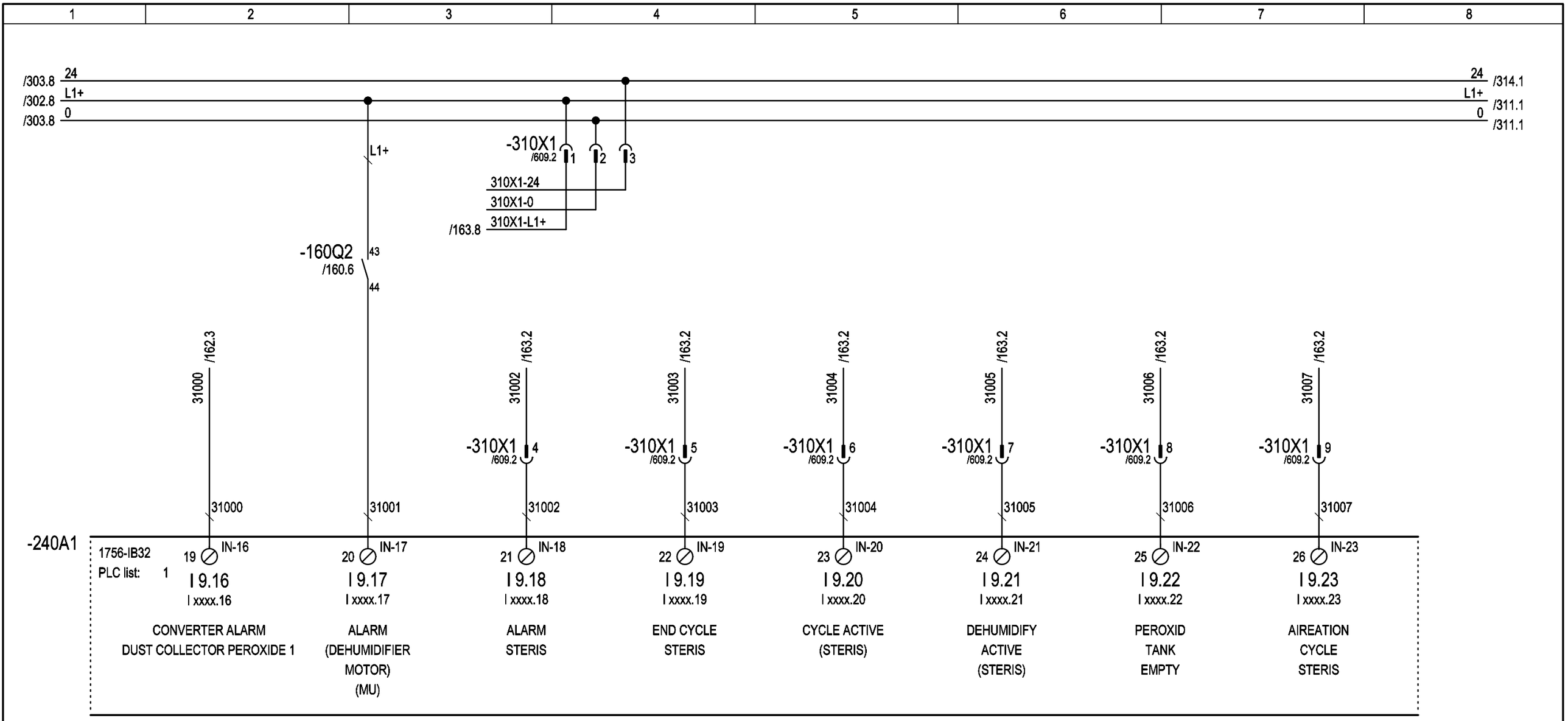

3				Date	\Z72	NURTURE, INC. (USA)	ACMAVOLPAK	TYPE OF MACHINE: SM-360 F4 WD	PLC's INPUTS PEROXIDE	=
2				Draw.	A.LLEONART			PROJECT Nº: 24981A		+
1	DIN			Print.	22.07.2014					Sheet 310
	Modification	Date	Name	Norm	DIN	Nº ORDER 13.025		\Z69		Next 311

PATH: 24981A/Diagrams/01-Electrical schemes/310

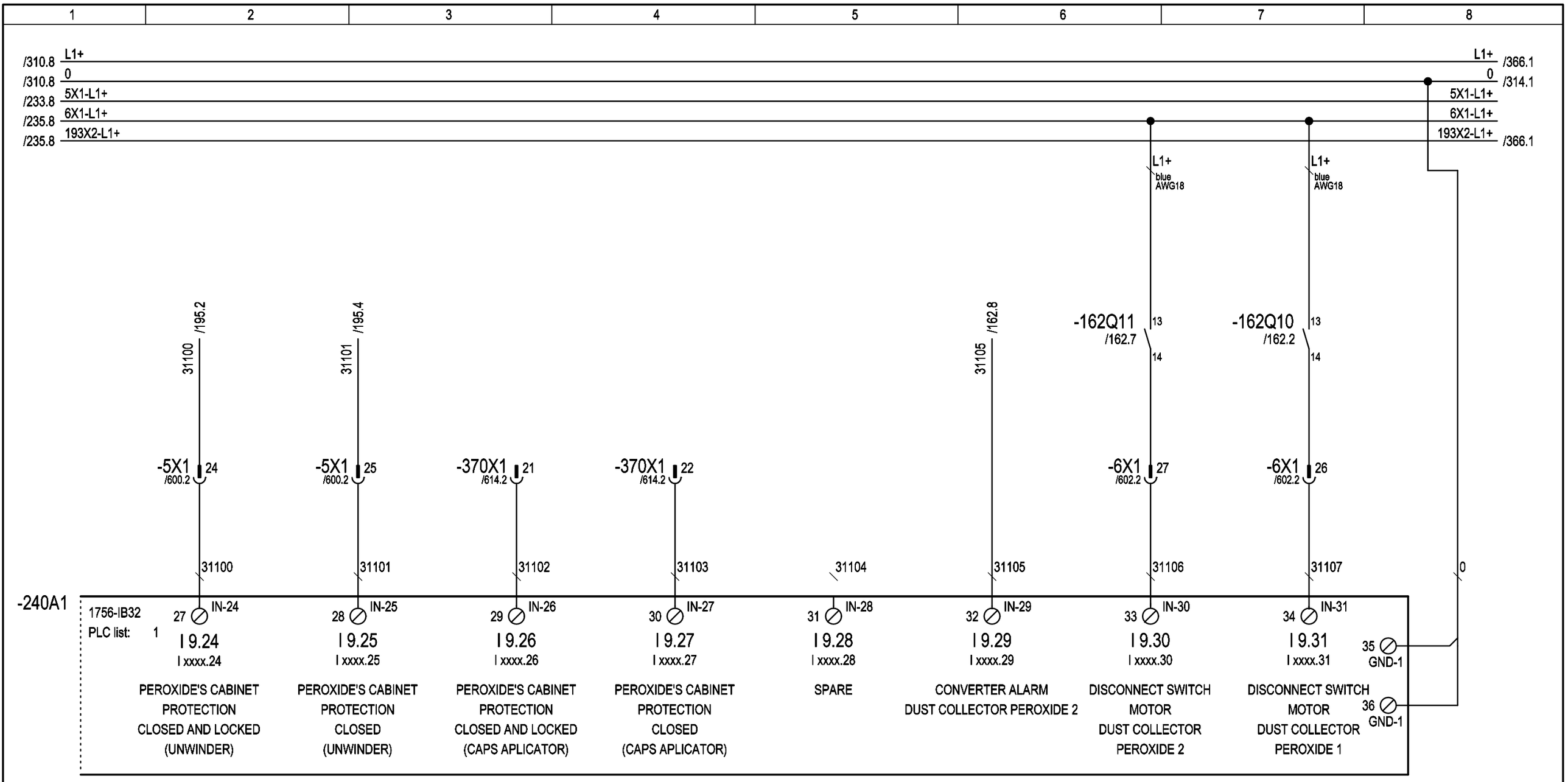

3				Date	\Z72	NURTURE, INC. (USA)	ACMAVOLPAK	TYPE OF MACHINE: SM-360 F4 WD	PLC's INPUTS PEROXIDE	=
2				Draw.	A.LLEONART			PROJECT Nº: 24981A		+
1	DIN			Print.	22.07.2014					Sheet 311
	Modification	Date	Name	Norm	DIN	Nº ORDER 13.025		\Z69		Next 314

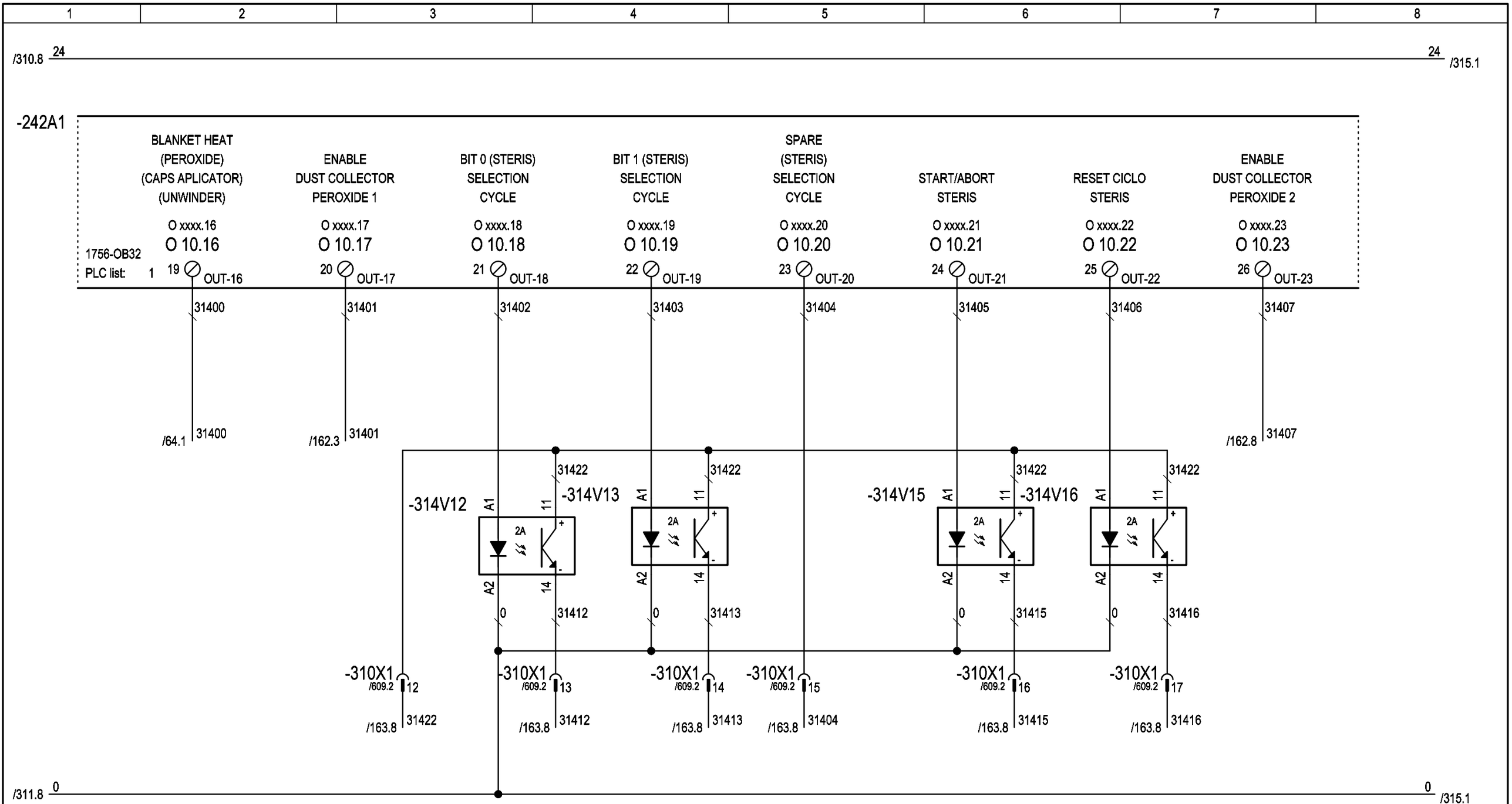

3				Date	\Z72	NURTURE, INC. (USA)	ACMAVOLPAK	TYPE OF MACHINE: SM-360 F4 WD	PLC's OUTPUTS PEROXIDE	=
2				Draw.	A.LLEONART			PROJECT Nº: 24981A		+
1	DIN			Print.	22.07.2014					Sheet 314
	Modification	Date	Name	Norm	DIN	Nº ORDER 13.025		\Z69		Next 315

PATH: 24981A/Diagrams/01-Electrical schemes/314

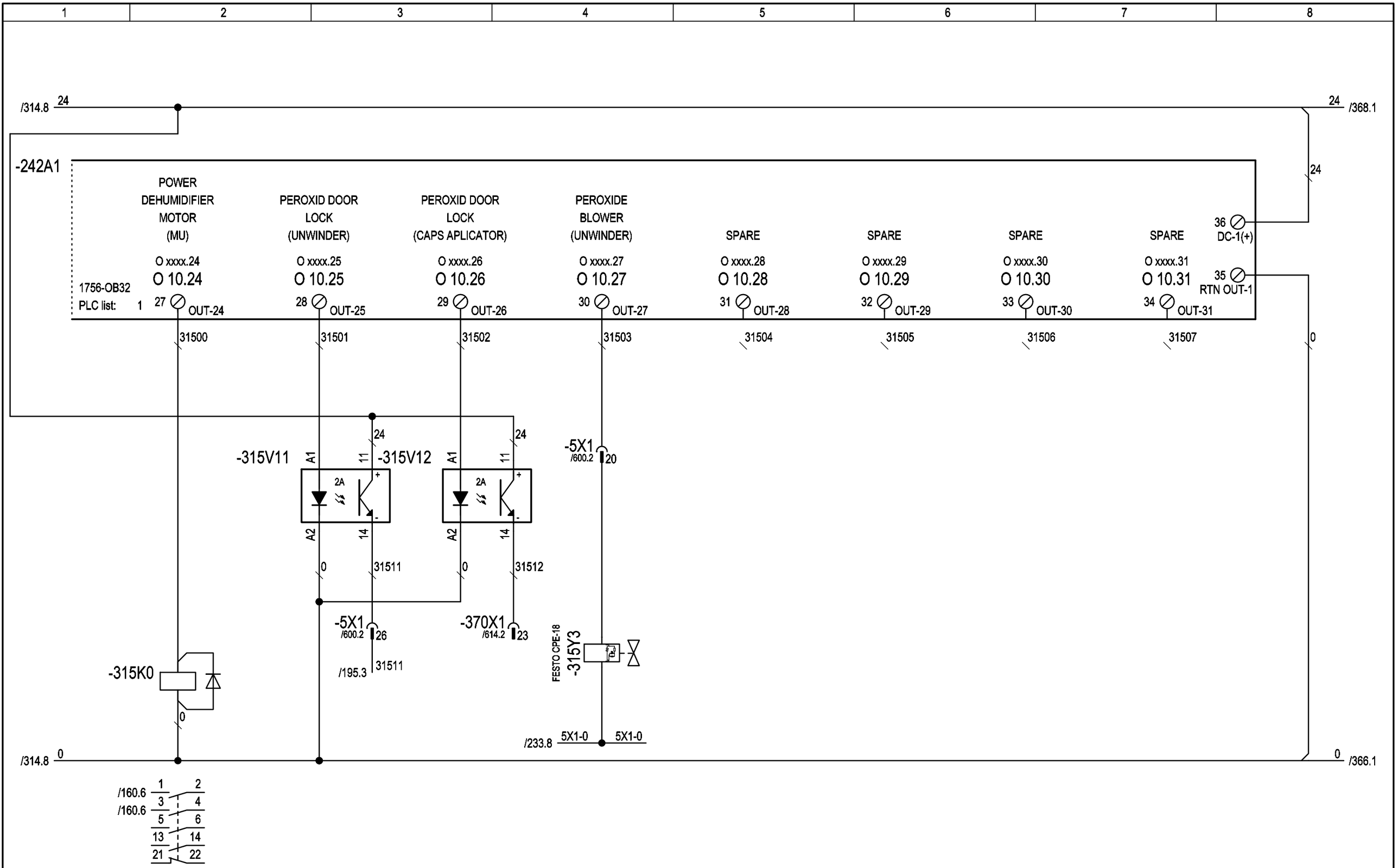

3				Date	\Z72	NURTURE, INC. (USA)	ACMAVOLPAK	TYPE OF MACHINE: SM-360 F4 WD	PLC's OUTPUTS PEROXIDE	=	
2				Draw.	A.LLEONART			PROJECT Nº: 24981A		+	
1	DIN			Print.	22.07.2014					Sheet 315	
	Modification	Date	Name	Norm	DIN	Nº ORDER 13.025		\Z69		Next 320	

PATH: 24981A/Diagrams/01-Electrical schemes/315

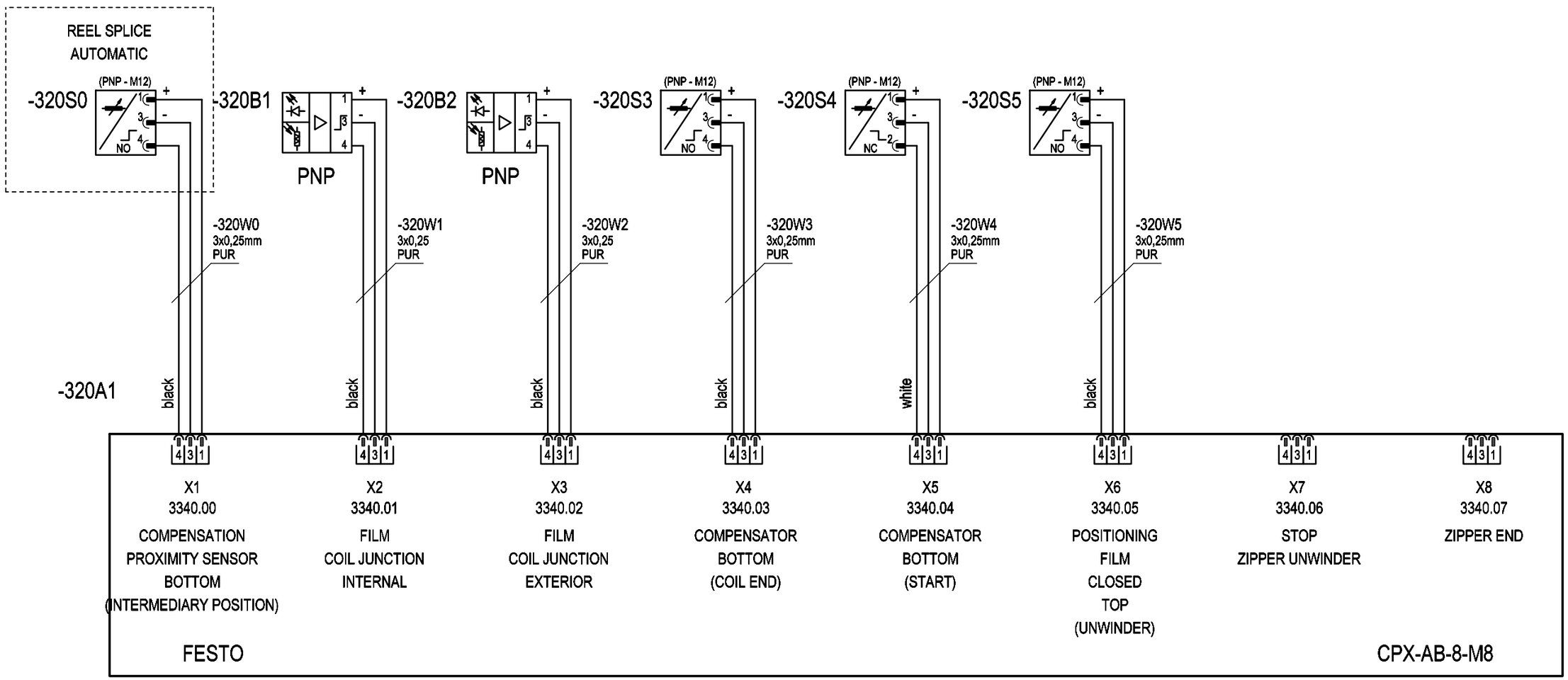

3				Date	\Z72	NURTURE, INC. (USA)	ACMAVOLPAK	TYPE OF MACHINE: SM-360 F4 WD	PLC's INPUTS (UNWINDER) TERMINAL VALVES CPX	=	
2				Draw.	A.LLEONART			PROJECT Nº: 24981A		+	
1	DIN			Print.	22.07.2014					Sheet 320	
	Modification	Date	Name	Norm	DIN	Nº ORDER 13.025		\Z69		Next 321	

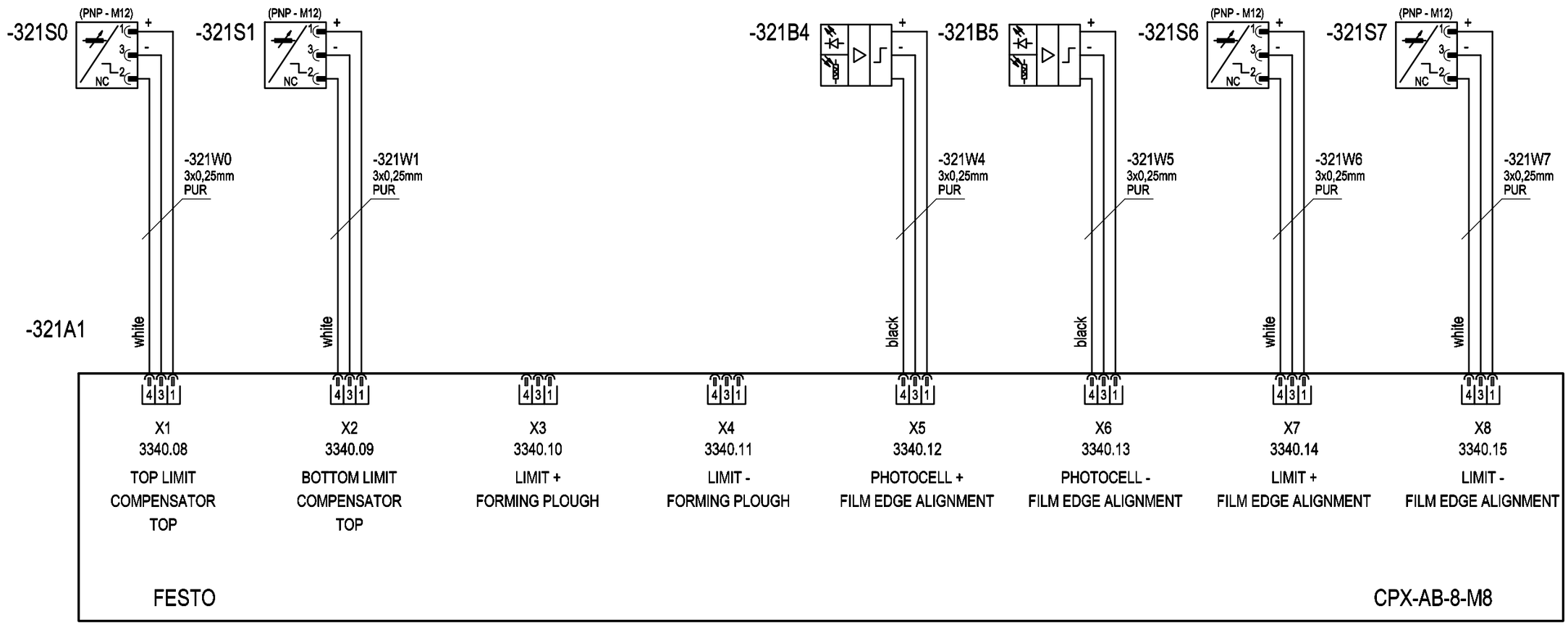

3				Date	\Z72	NURTURE, INC. (USA)	ACMAVOLPAK	TYPE OF MACHINE: SM-360 F4 WD	PLC's INPUTS (UNWINDER) TERMINAL VALVES CPX	=
2				Draw.	A.LLEONART			PROJECT Nº: 24981A		+
1	DIN			Print.	22.07.2014					Sheet 321
	Modification	Date	Name	Norm	DIN	Nº ORDER 13.025		\Z69		Next 324

PATH: 24981A/Diagrams/01-Electrical schemes/321

-324A1

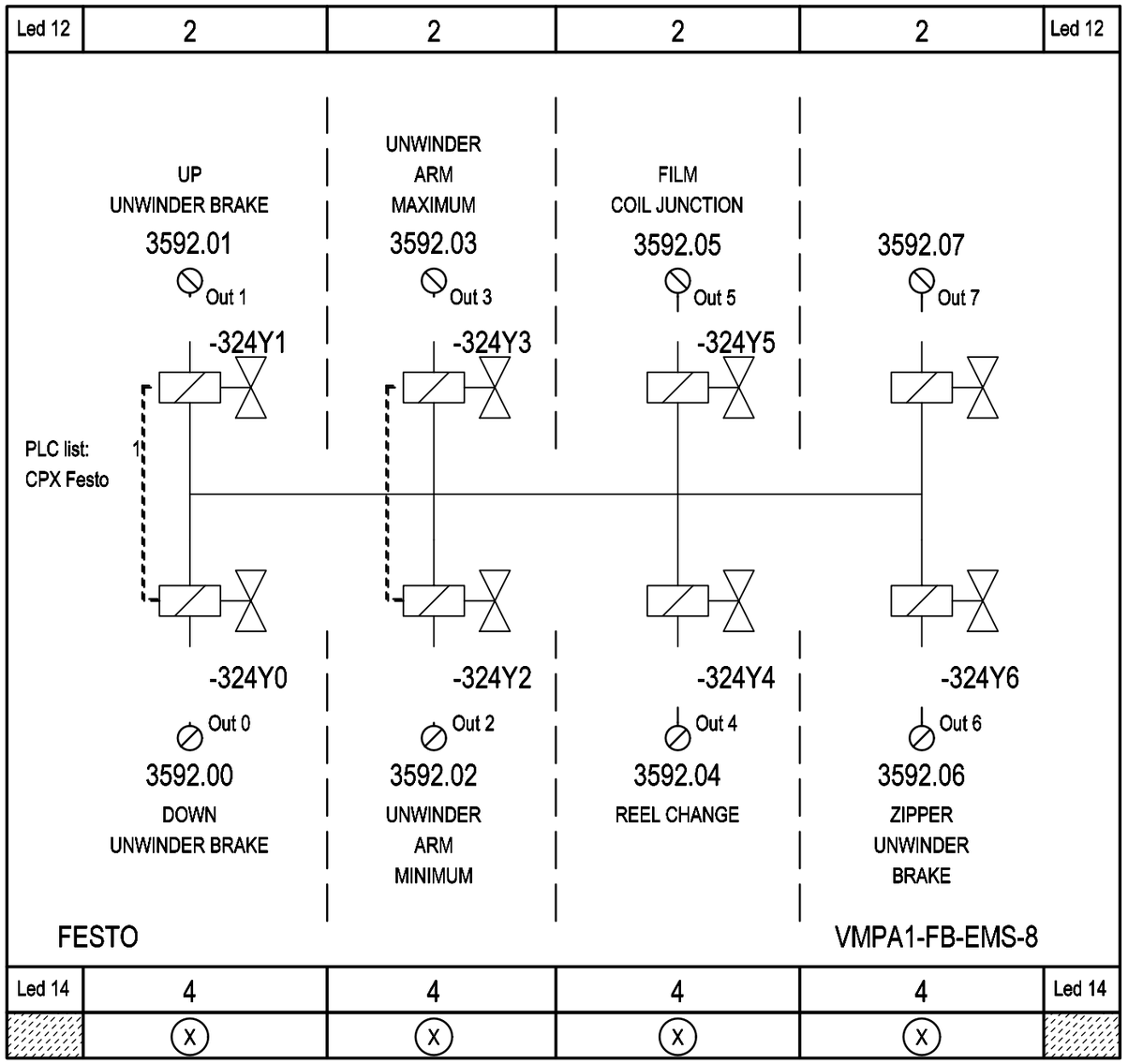

3				Date	\Z72	NURTURE, INC. (USA)	ACMAVOLPAK	TYPE OF MACHINE: SM-360 F4 WD	PLC's OUTPUTS (UNWINDER) TERMINAL VALVES CPX	=	
2				Draw.	A.LLEONART			PROJECT Nº: 24981A		+	
1	DIN			Print.	22.07.2014					Sheet 324	
	Modification	Date	Name	Norm	DIN	Nº ORDER 13.025		\Z69		Next 325	

PATH: 24981A/Diagrams/01-Electrical schemes/324

-325A1

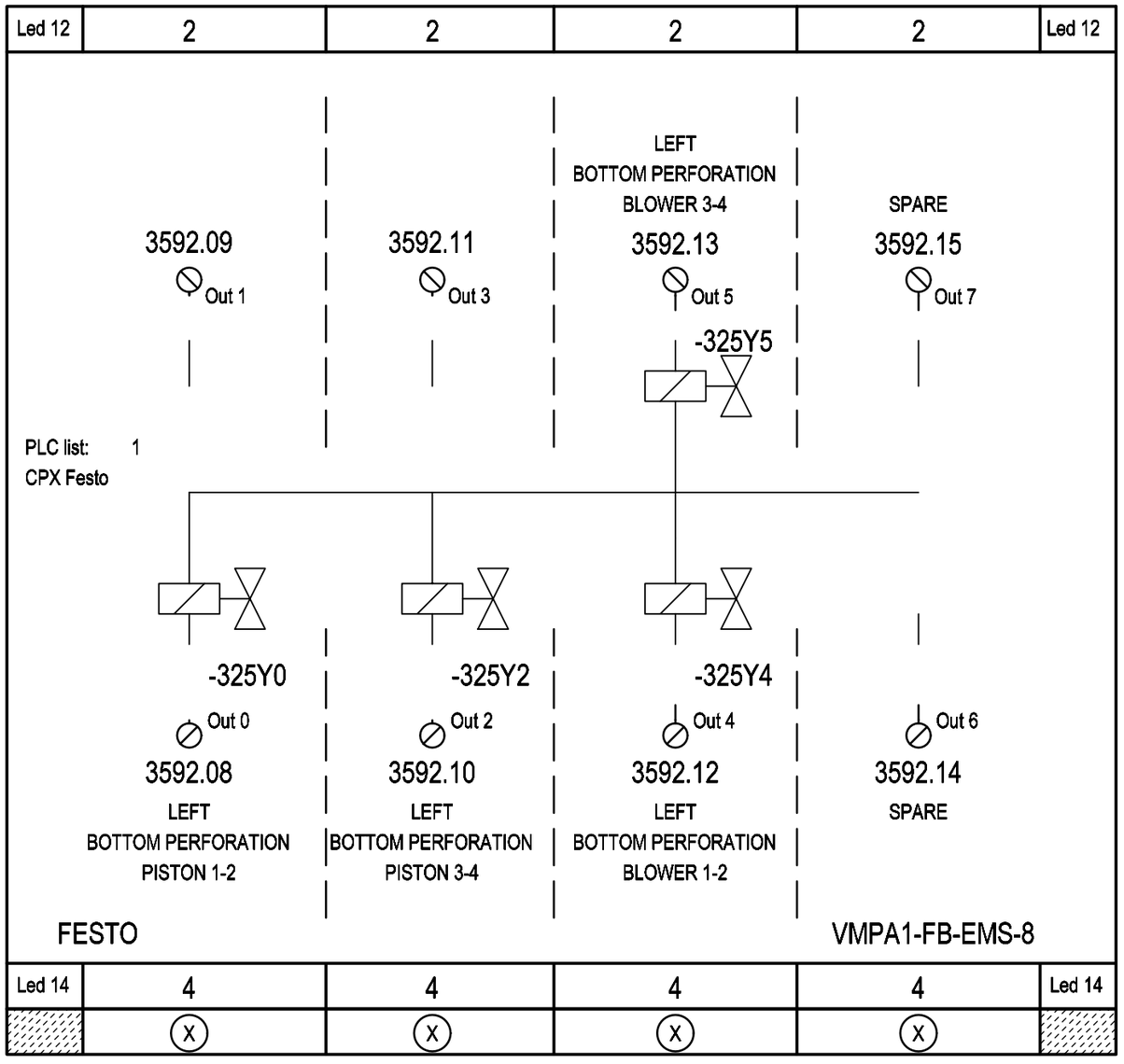

3				Date	\Z72	NURTURE, INC. (USA)	ACMAVOLPAK	TYPE OF MACHINE: SM-360 F4 WD	PLC's OUTPUTS (UNWINDER) TERMINAL VALVES CPX	=
2				Draw.	A.LLEONART			PROJECT Nº: 24981A		+
1	DIN			Print.	22.07.2014					Sheet 325
	Modification	Date	Name	Norm	DIN	Nº ORDER 13.025		\Z69		Next 326

PATH: 24981A/Diagrams/01-Electrical schemes/325

-326A1

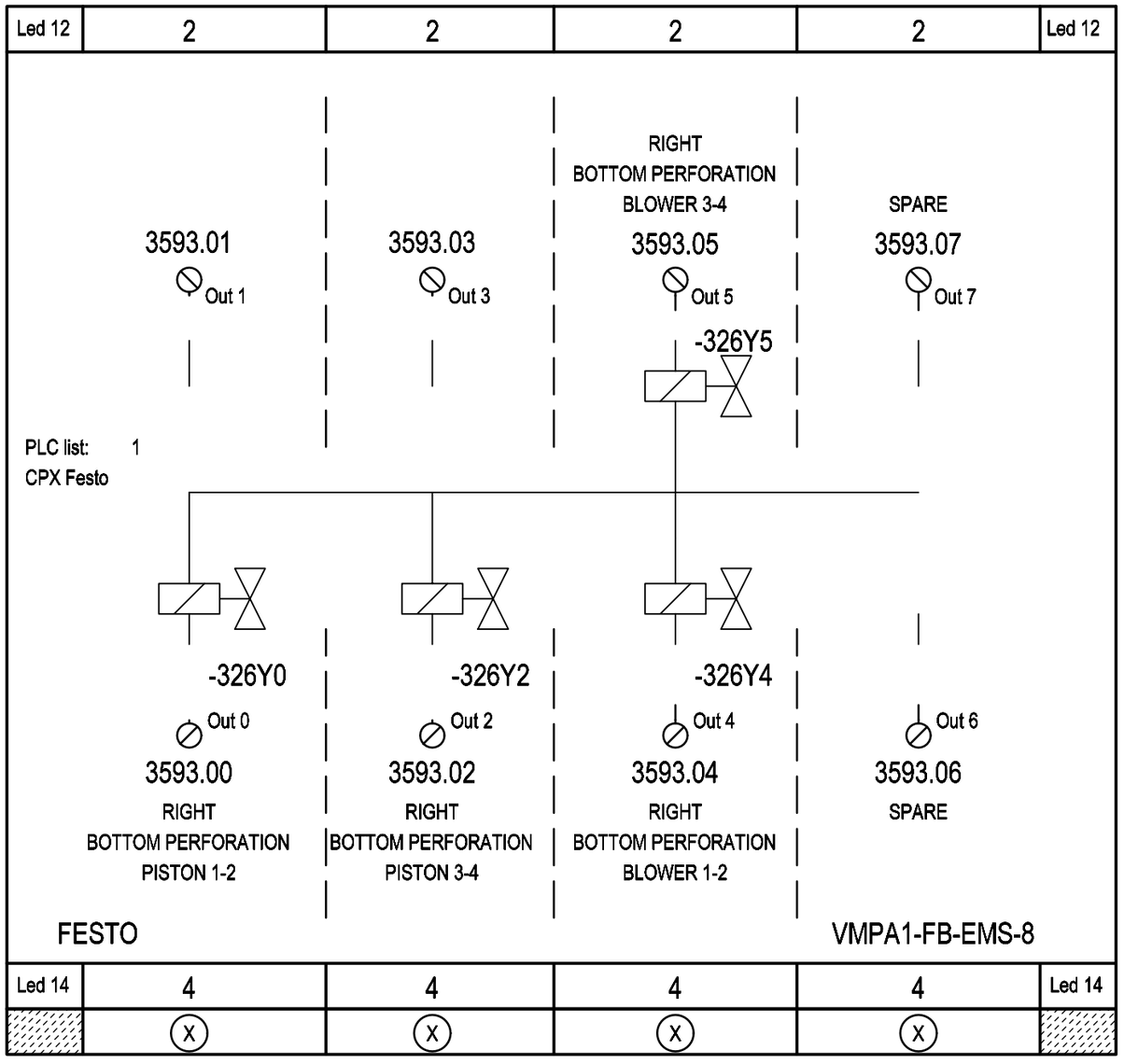

3				Date	\Z72	NURTURE, INC. (USA)	ACMAVOLPAK	TYPE OF MACHINE: SM-360 F4 WD	PLC's OUTPUTS (UNWINDER) TERMINAL VALVES CPX	=
2				Draw.	A.LLEONART			PROJECT Nº: 24981A		+
1	DIN			Print.	22.07.2014					Sheet 326
	Modification	Date	Name	Norm	DIN	Nº ORDER 13.025		\Z69		Next 328

PATH: 24981A/Diagrams/01-Electrical schemes/326

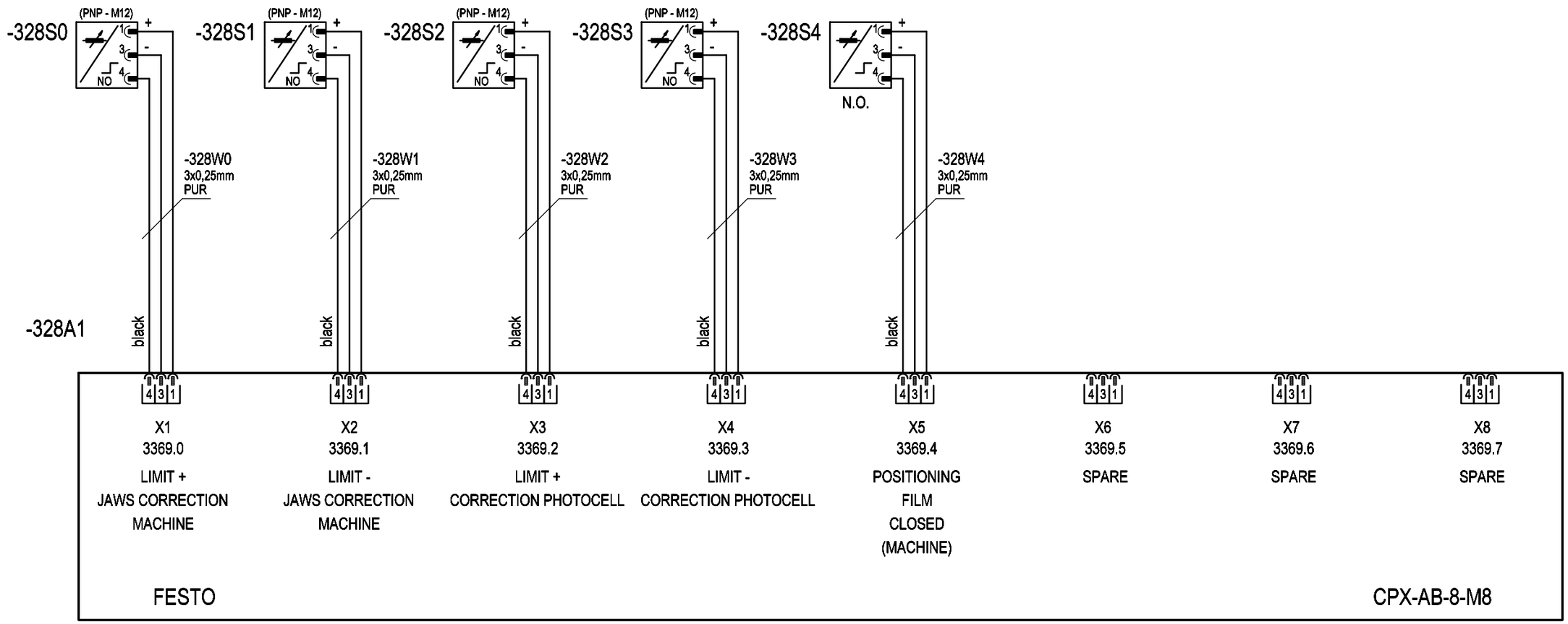

3				Date	\Z72	NURTURE, INC. (USA)	ACMAVOLPAK	TYPE OF MACHINE: SM-360 F4 WD	PLC's INPUTS (SEALING MODULE) TERMINAL VALVES CPX	=	
2				Draw.	A.LLEONART			PROJECT Nº: 24981A		+	
1	DIN			Print.	22.07.2014					Sheet 328	
	Modification	Date	Name	Norm	DIN	Nº ORDER 13.025		\Z69		Next 329	

PATH: 24981A/Diagrams/01-Electrical schemes/328

1	2	3	4	5	6	7	8

-329A1

X1	X2	X3	X4	X5	X6	X7	X8
3369.8	3369.9	3369.10	3369.11	3369.12	3369.13	3369.14	3369.15
SPARE	SPARE	SPARE	SPARE	SPARE	SPARE	SPARE	SPARE

FESTO

CPX-AB-8-M8

3				Date	\Z72	NURTURE, INC. (USA)	ACMAVOLPAK	TYPE OF MACHINE: SM-360 F4 WD	PLC's INPUTS (SEALING MODULE) TERMINAL VALVES CPX
2				Draw.	A.LLEONART			PROJECT Nº: 24981A	=
1	DIN			Print.	22.07.2014				+
	Modification	Date	Name	Norm	DIN	Nº ORDER 13.025		\Z69	Sheet 329
									Next 330

PATH: 24981A/Diagrams/01-Electrical schemes/329

1	2	3	4	5	6	7	8

-330A1

Led 12	2	2	2	2	Led 12
	SEALING MODULE JAWS CLOSE		BLOWER PERFORATION POUCH 1 (TOP-BOTTOM)	BLOWER PERFORATION POUCH 2 (TOP-BOTTOM)	
	3618.1	3618.3	3618.5	3618.7	
	Out 1	Out 3	Out 5	Out 7	
	-330Y1		-330Y5	-330Y7	
PLC list: CPX Festo	1				
	-330Y0	-330Y2	-330Y4	-330Y6	
	Out 0	Out 2	Out 4	Out 6	
	3618.0	3618.2	3618.4	3618.6	
	SEALING MODULE JAWS OPEN	FILM FEEDER OPENING	BLOWER POUCH CORNER PERFORATION 1 (TOP-BOTTOM)	BLOWER POUCH CORNER PERFORATION 2 (TOP-BOTTOM)	
FESTO				VMPA1-FB-EMS-8	
Led 14	4	4	4	4	Led 14
	J	M	K	K	

-330A2

Led 12	2	2	2	2	Led 12
	BLOWER PERFORATION POUCH 3 (TOP-BOTTOM)	BLOWER PERFORATION POUCH 4 (TOP-BOTTOM)			
	3618.9	3618.11	3618.13	3618.15	
	Out 1	Out 3	Out 5	Out 7	
	-330Y11	-330Y13			
PLC list: CPX Festo	1				
	-330Y10	-330Y12			
	Out 0	Out 2	Out 4	Out 6	
	3618.8	3618.10	3618.12	3618.14	
	BLOWER POUCH CORNER PERFORATION 3 (TOP-BOTTOM)	BLOWER POUCH CORNER PERFORATION 4 (TOP-BOTTOM)			
FESTO				VMPA1-FB-EMS-8	
Led 14	4	4	4	4	Led 14
	K	K	L	L	

3				Date	\Z72	NURTURE, INC. (USA)	ACMAVOLPAK	TYPE OF MACHINE: SM-360 F4 WD	PLC's OUTPUTS (SEALING MODULE) TERMINAL VALVES CPX	=
2				Draw.	A.LLEONART			PROJECT Nº: 24981A		+
1	DIN			Print.	22.07.2014					Sheet 330
	Modification	Date	Name	Norm	DIN	Nº ORDER 13.025		\Z69		Next 331

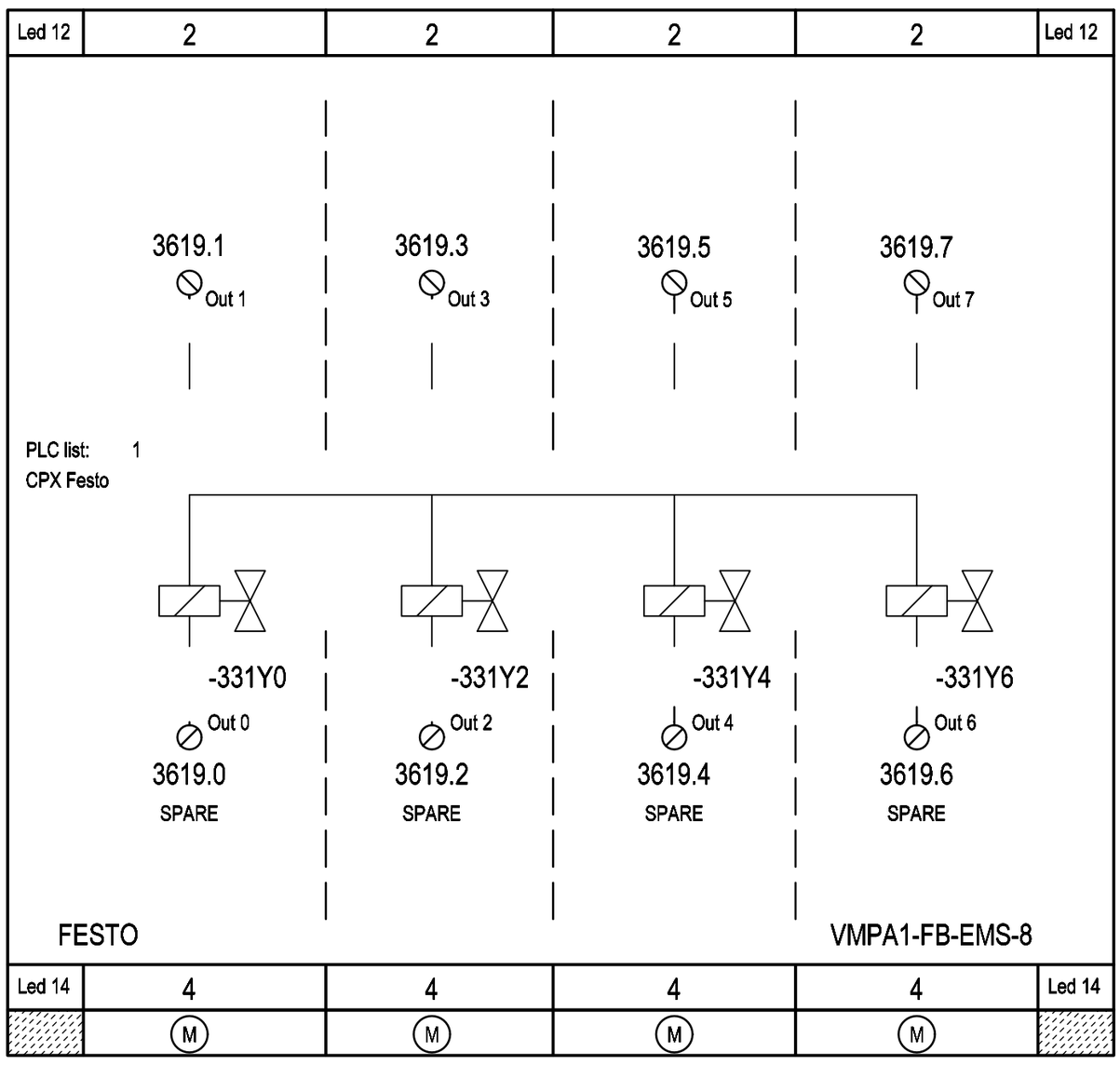

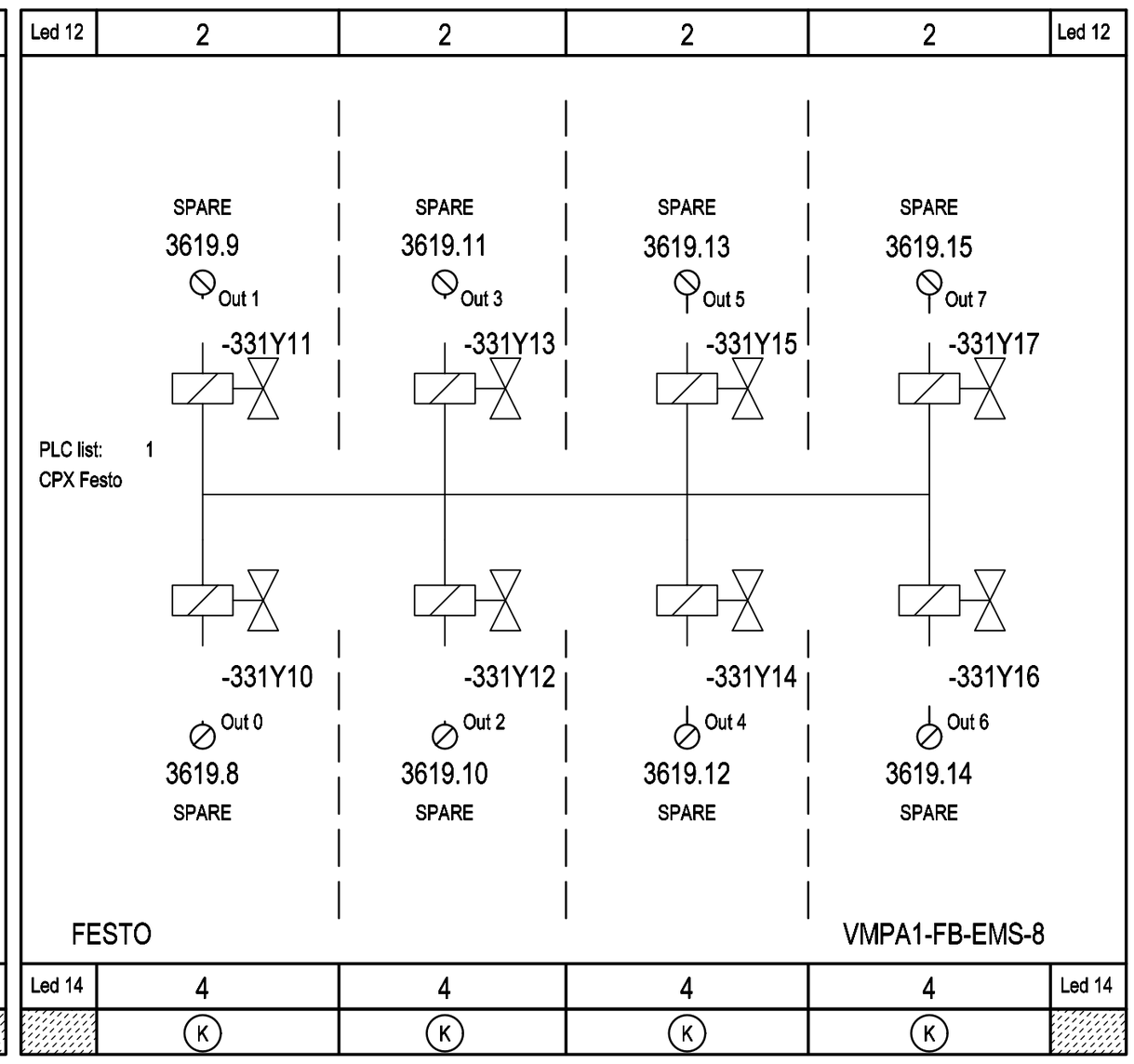

3				Date	\Z72	NURTURE, INC. (USA)	ACMAVOLPAK	TYPE OF MACHINE: SM-360 F4 WD	PLC's OUTPUTS (SEALING MODULE) TERMINAL VALVES CPX	=
2				Draw.	A.LLEONART			PROJECT Nº: 24981A		+
1	DIN			Print.	22.07.2014					Sheet 331
	Modification	Date	Name	Norm	DIN	Nº ORDER 13.025		\Z69		Next 334

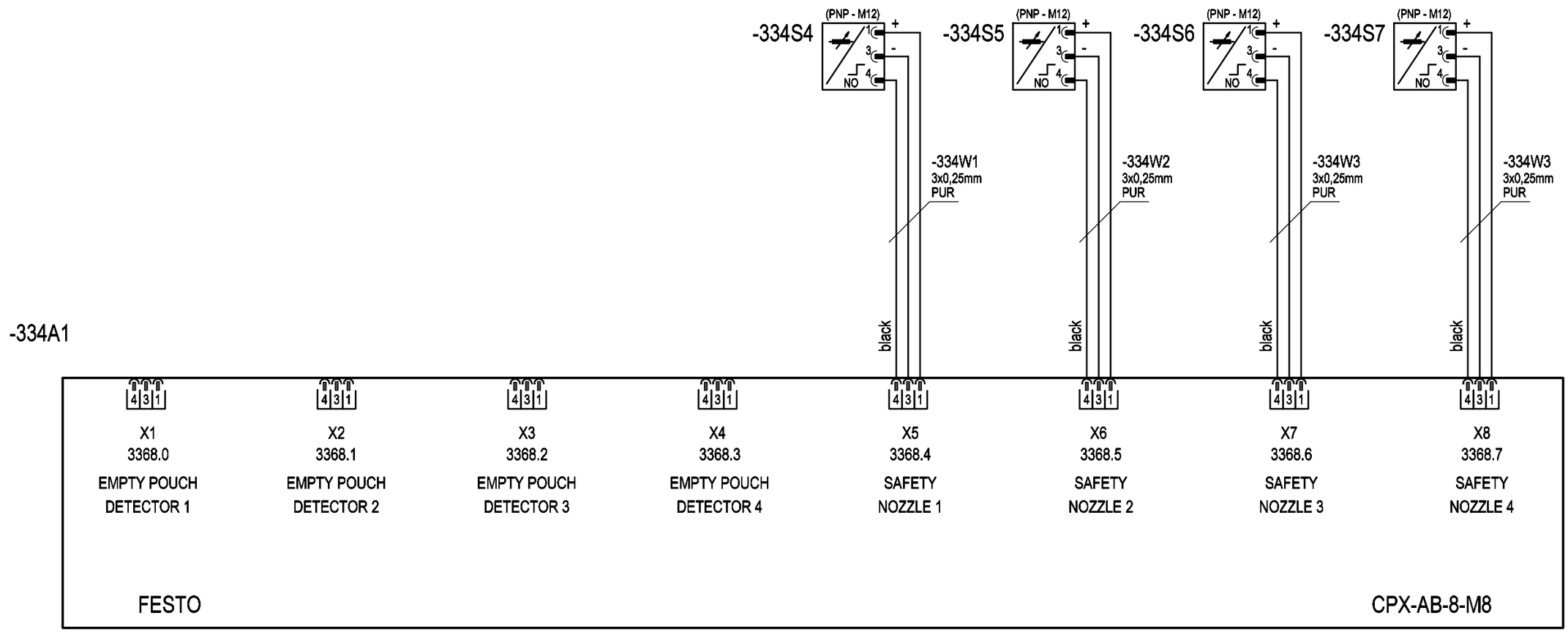

3				Date	\Z72	NURTURE, INC. (USA)	ACMAVOLPAK	TYPE OF MACHINE: SM-360 F4 WD	PLC's INPUTS (FILLING MODULE) TERMINAL VALVES CPX	=
2				Draw.	A.LLEONART			PROJECT Nº: 24981A		+
1	DIN			Print.	22.07.2014					Sheet 334
	Modification	Date	Name	Norm	DIN	Nº ORDER 13.025		\Z69		Next 335

PATH: 24981A/Diagrams/01-Electrical schemes/334

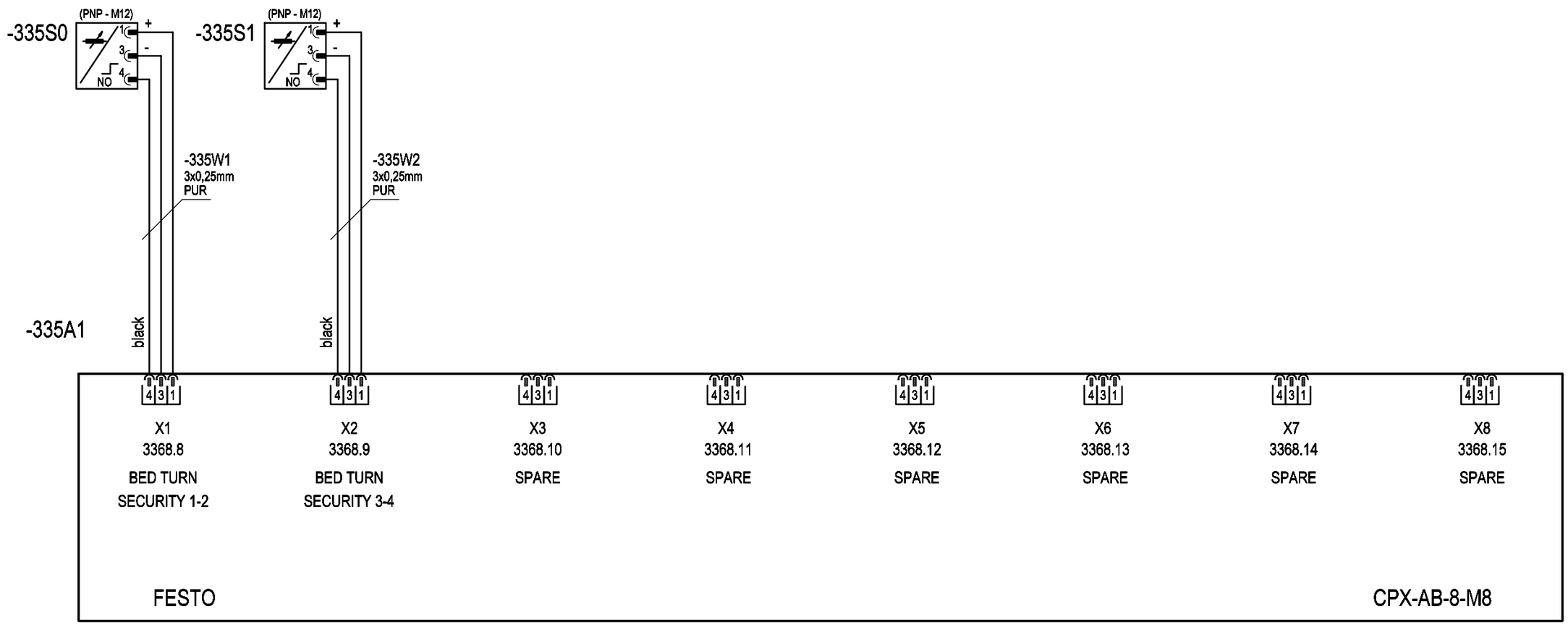

3				Date	\Z72	NURTURE, INC.	ACMAVOLPAK	TYPE OF MACHINE: SM-360 F4 WD	PLC's INPUTS	=	
2				Draw.	A.LLEONART	(USA)		PROJECT Nº: 24981A	(FILLING MODULE)	+	
1	DIN			Print.	22.07.2014					Sheet 335	
	Modification	Date	Name	Norm	DIN	Nº ORDER 13.025		\Z69	TERMINAL VALVES CPX	Next 336	

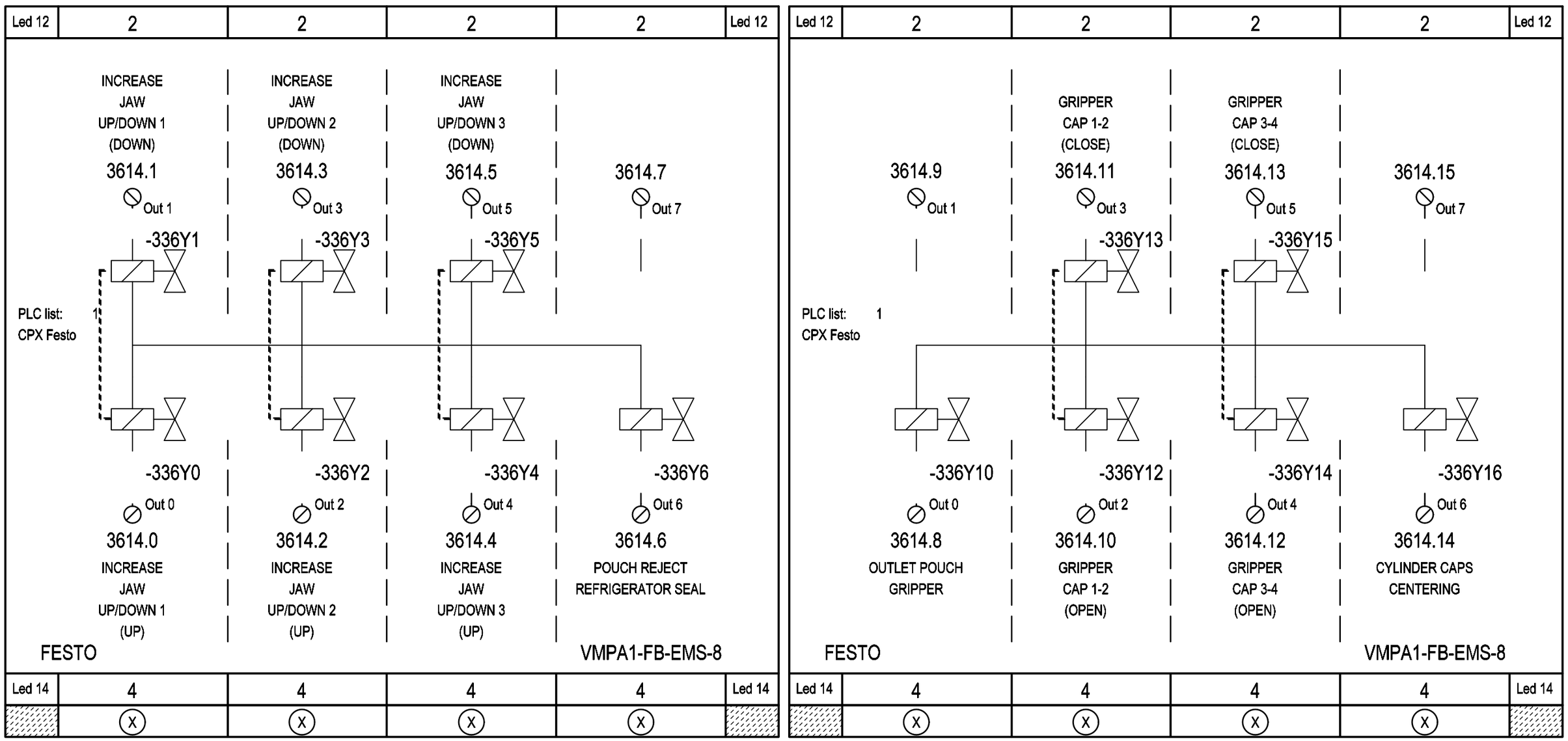

3				Date	\Z72
2				Draw.	A.LLEONART
1	DIN			Print.	22.07.2014
	Modification	Date	Name	Norm	DIN

NURTURE, INC.
(USA)
Nº ORDER 13.025

ACMAVOLPAK

TYPE OF MACHINE: SM-360 F4 WD
PROJECT Nº: 24981A
\Z69

PLC's OUTPUTS
(FILLING MODULE)
TERMINAL VALVES CPX

=
+
Sheet 336
Next 366

PATH: 24981A/Diagrams/01-Electrical schemes/336

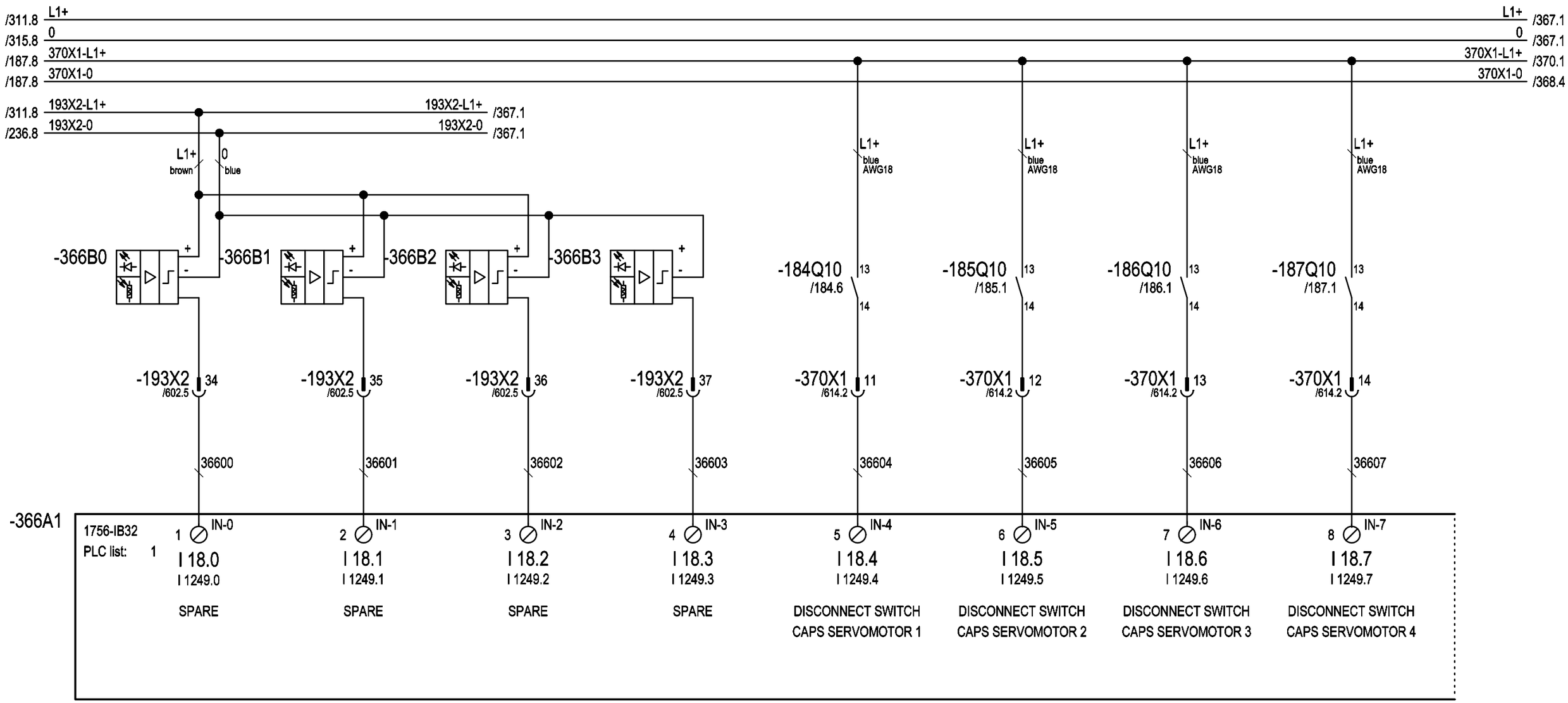

3				Date	\Z72	NURTURE, INC. (USA)
2				Draw.	A.LLEONART	
1	DIN			Print.	22.07.2014	Nº ORDER 13.025
	Modification	Date	Name	Norm	DIN	

ACMAVOLPAK

TYPE OF MACHINE: SM-360 F4 WD
PROJECT Nº: 24981A
\Z69

PLC's INPUTS
CAPS APLICATOR (CA-998/4)

=
+
Sheet 366
Next 367

PATH: 24981A/Diagrams/01-Electrical schemes/366

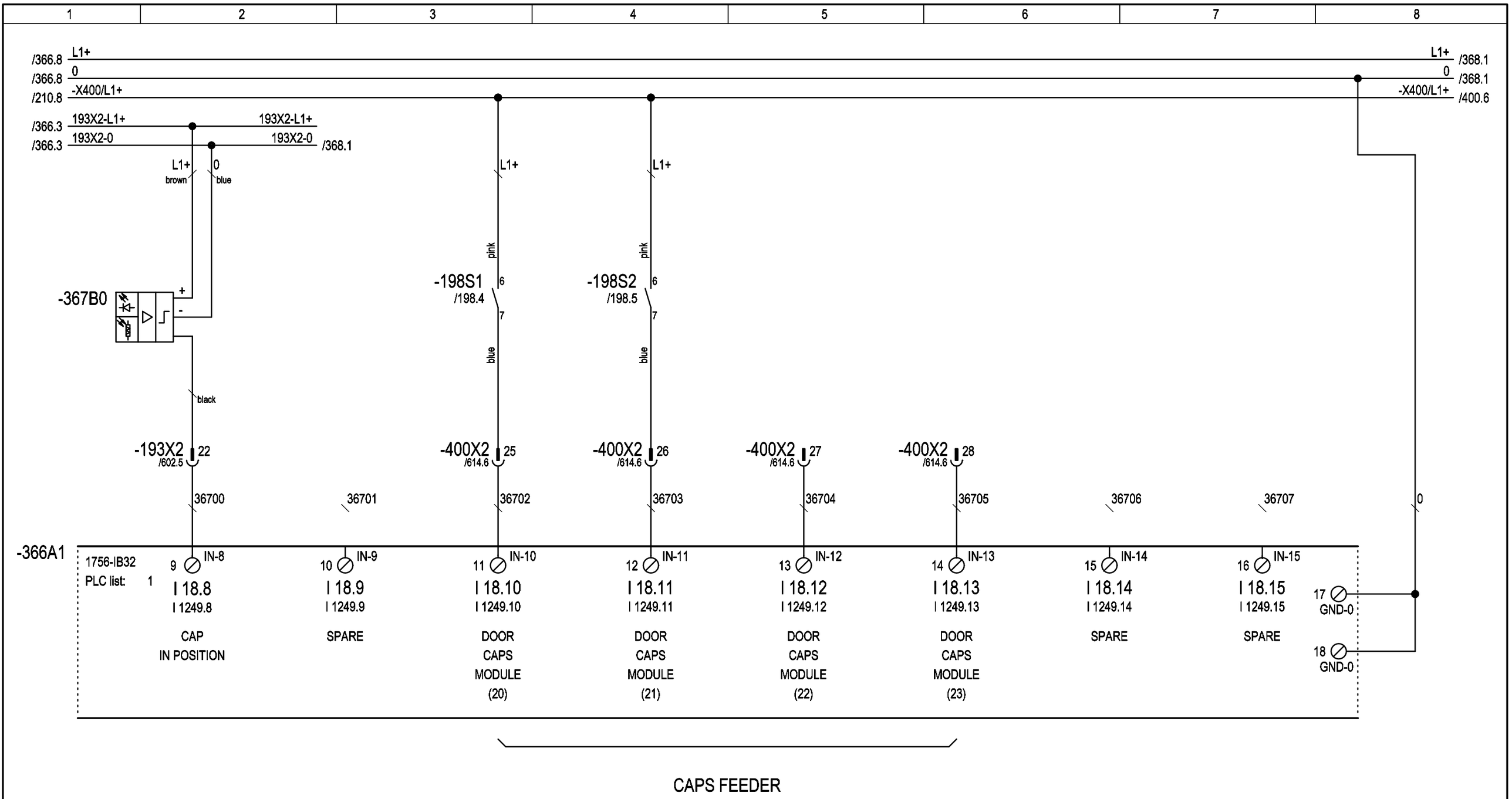

3				Date	\Z72	NURTURE, INC. (USA)	ACMAVOLPAK	TYPE OF MACHINE: SM-360 F4 WD	PLC's INPUTS CAPS APLICATOR (CA-998/4)	=
2				Draw.	A.LLEONART			PROJECT Nº: 24981A		+
1	DIN			Print.	22.07.2014					Sheet 367
	Modification	Date	Name	Norm	DIN	Nº ORDER 13.025		\Z69		Next 368

PATH: 24981A/Diagrams/01-Electrical schemes/367

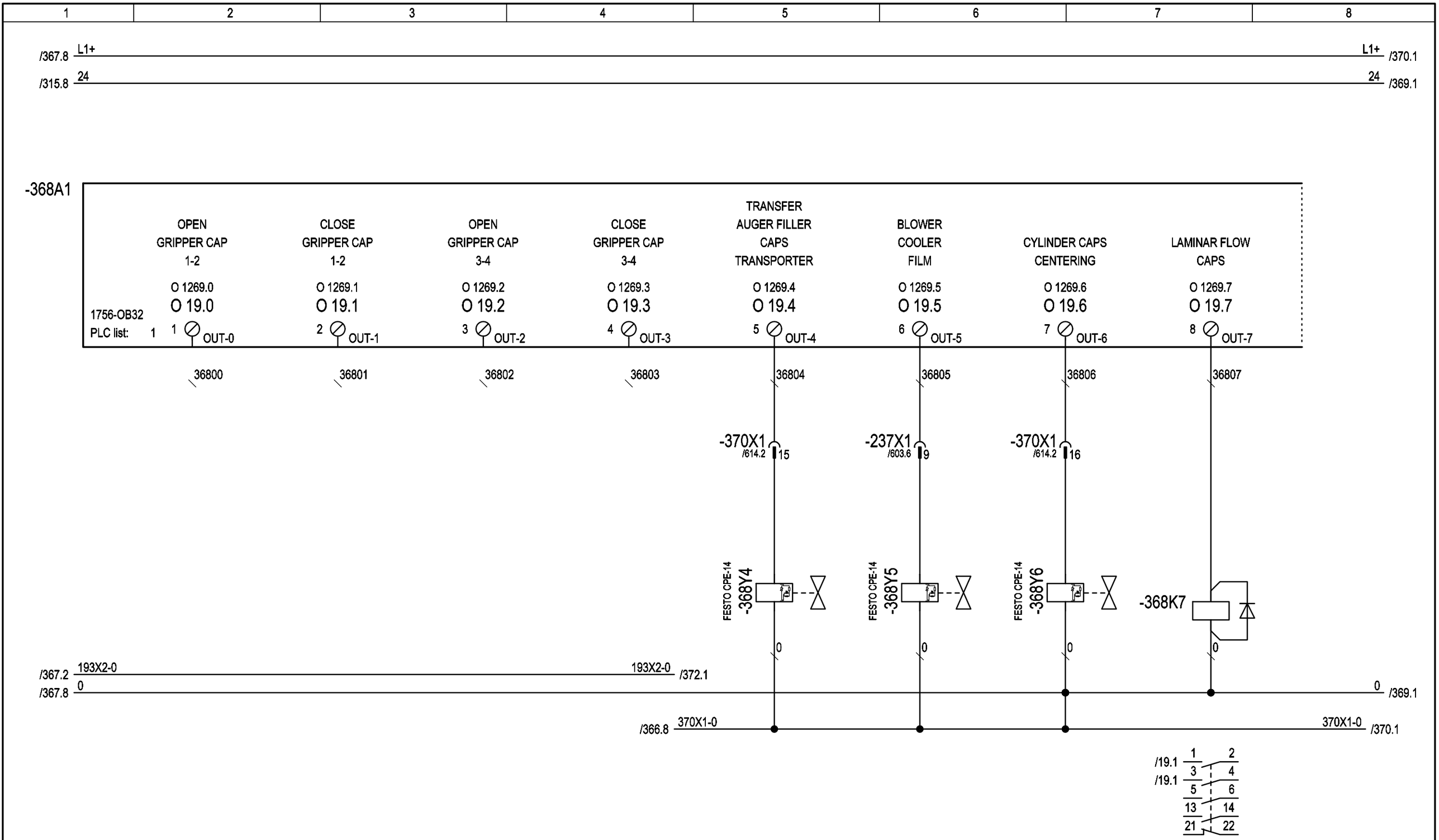

3				Date	\Z72	NURTURE, INC. (USA)	ACMAVOLPAK	TYPE OF MACHINE: SM-360 F4 WD	PLC's OUTPUTS CAPS APLICATOR (CA-998/4)	=
2				Draw.	A.LLEONART			PROJECT Nº: 24981A		+
1	DIN			Print.	22.07.2014					Sheet 368
	Modification	Date	Name	Norm	DIN	Nº ORDER 13.025		\Z69		Next 369

PATH: 24981A/Diagrams/01-Electrical schemes/368

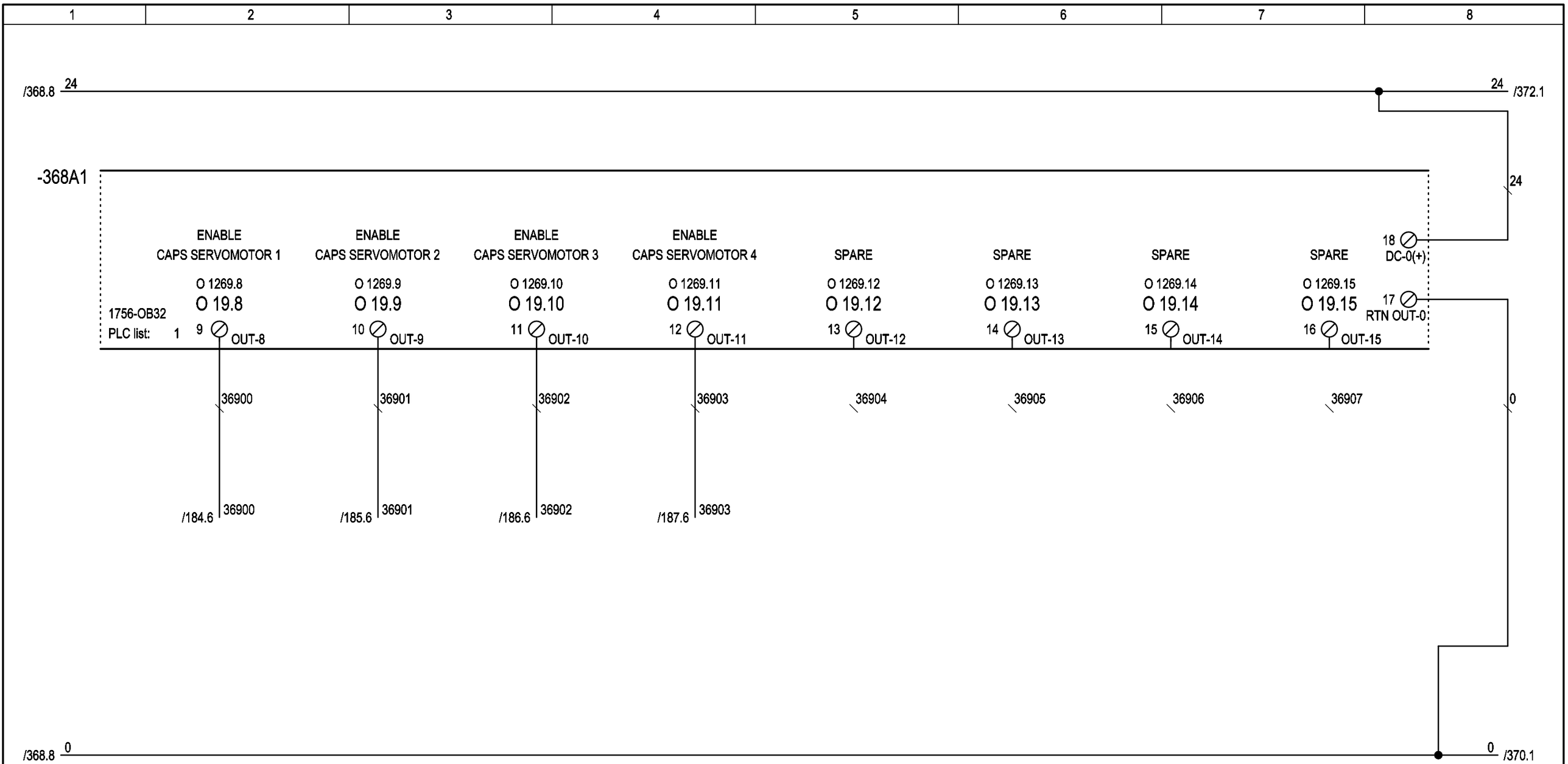

3				Date	\Z72	NURTURE, INC.	ACMAVOLPAK	TYPE OF MACHINE: SM-360 F4 WD	PLC's OUTPUTS	=
2				Draw.	A.LLEONART	(USA)		PROJECT Nº: 24981A		+
1	DIN			Print.	22.07.2014					Sheet 369
	Modification	Date	Name	Norm	DIN	Nº ORDER 13.025		\Z69	CAPS APLICATOR (CA-998/4)	Next 370

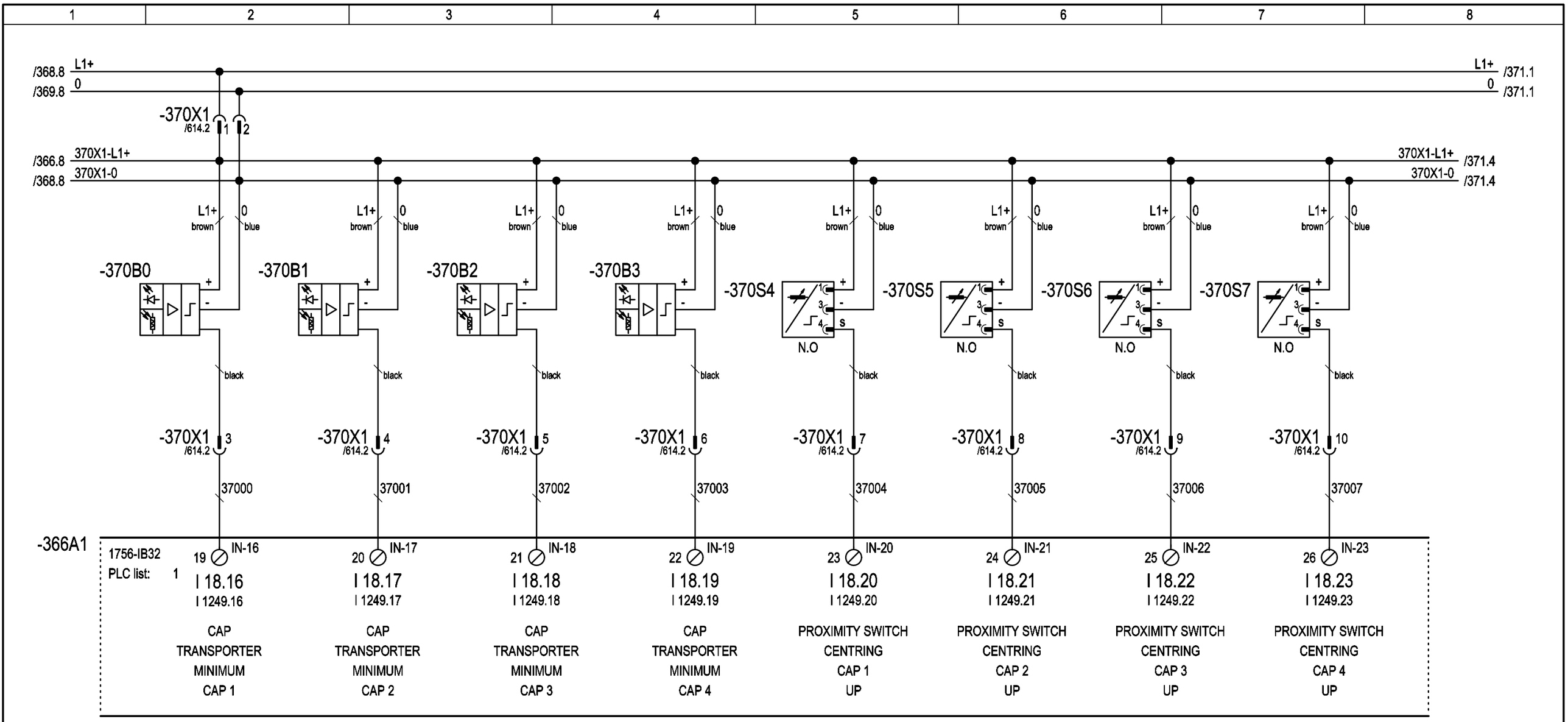

3				Date	\Z72	NURTURE, INC. (USA)	ACMAVOLPAK	TYPE OF MACHINE: SM-360 F4 WD	PLC's INPUTS CAPS APLICATOR (CA-998/4)	=
2				Draw.	A.LLEONART			PROJECT Nº: 24981A		+
1	DIN			Print.	22.07.2014					Sheet 370
	Modification	Date	Name	Norm	DIN	Nº ORDER 13.025		\Z69		Next 371

PATH: 24981A/Diagrams/01-Electrical schemes/370

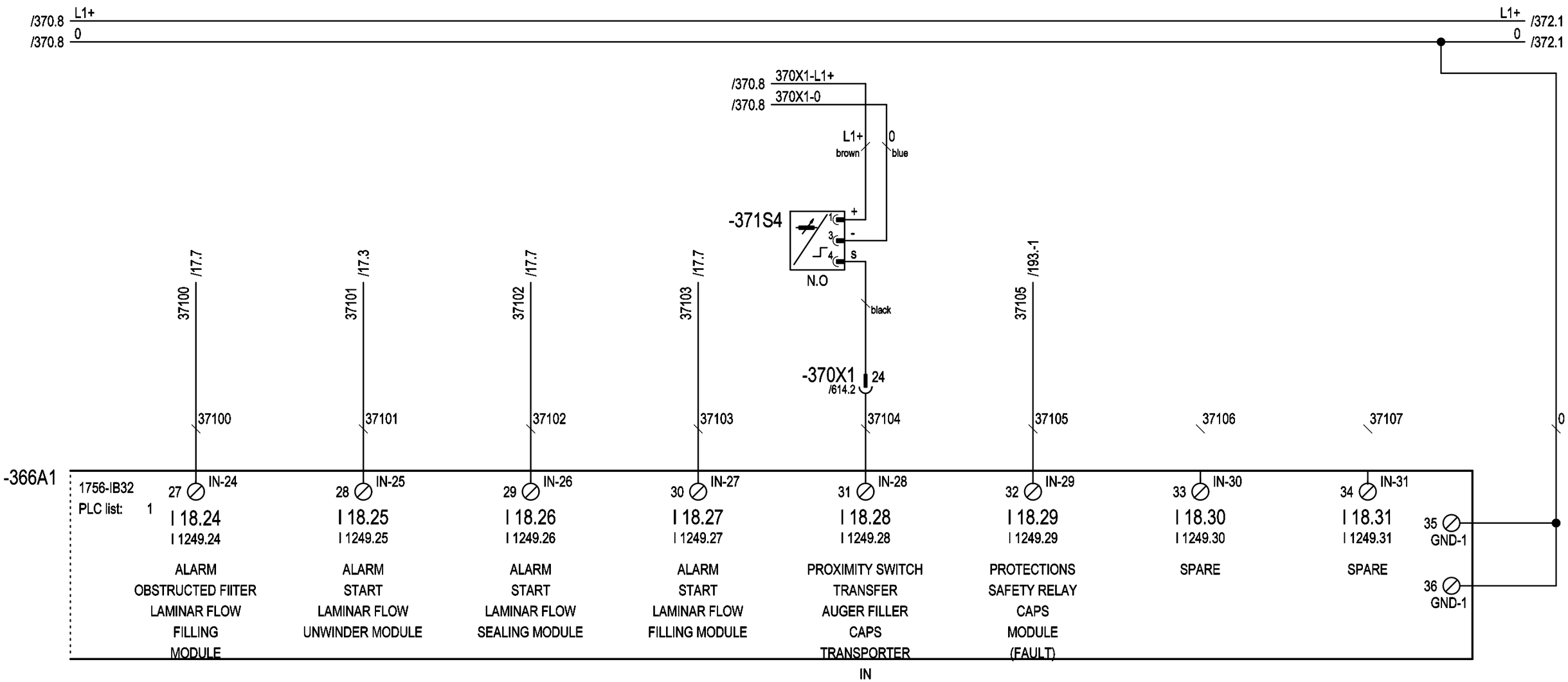

3				Date	\Z72	NURTURE, INC. (USA)	ACMAVOLPAK	TYPE OF MACHINE: SM-360 F4 WD	PLC's INPUTS CAPS APLICATOR (CA-998/4)	=	
2				Draw.	A.LLEONART			PROJECT Nº: 24981A		+	
1	DIN			Print.	22.07.2014					Sheet 371	
	Modification	Date	Name	Norm	DIN	Nº ORDER 13.025		\Z69		Next 372	

PATH: 24981A/Diagrams/01-Electrical schemes/371

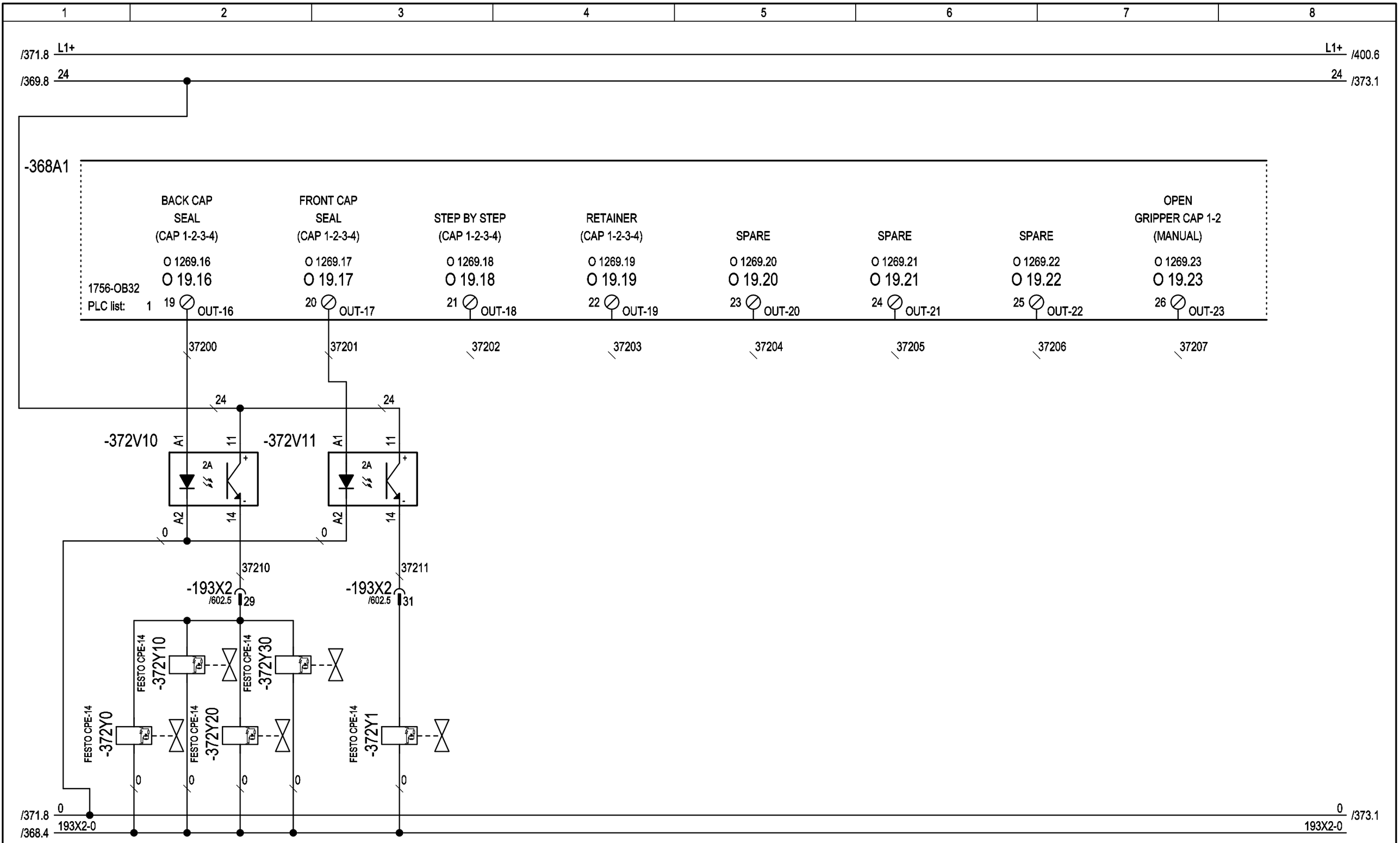

3				Date	\Z72	NURTURE, INC. (USA)	ACMAVOLPAK	TYPE OF MACHINE: SM-360 F4 WD
2				Draw.	A.LLEONART			PROJECT Nº: 24981A
1	DIN			Print.	22.07.2014			\Z69
	Modification	Date	Name	Norm	DIN	Nº ORDER 13.025		

PLC's OUTPUTS
CAPS APLICATOR (CA-998/4)

=
+
Sheet 372
Next 373

PATH: 24981A/Diagrams/01-Electrical schemes/372

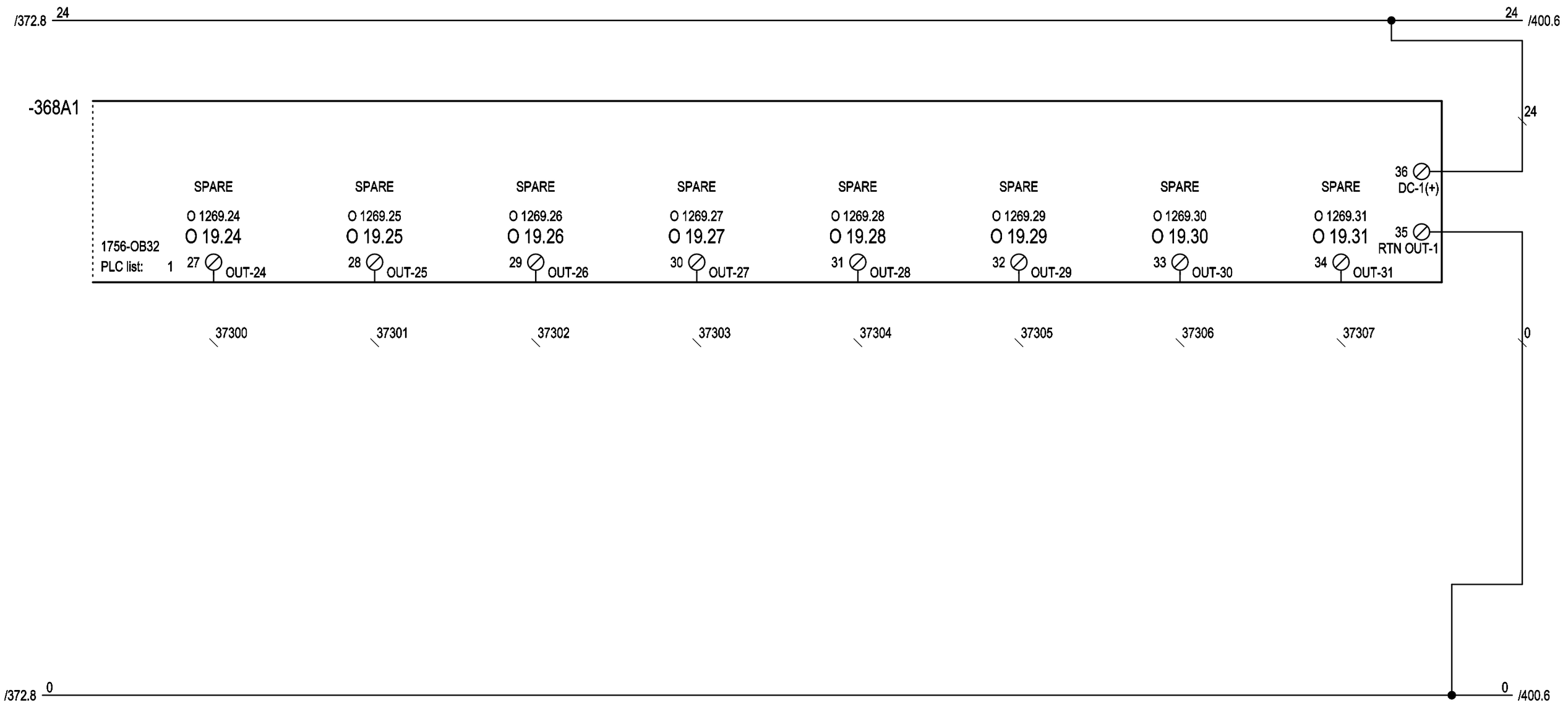

3				Date	\Z72	NURTURE, INC. (USA)	ACMAVOLPAK	TYPE OF MACHINE: SM-360 F4 WD	PLC's OUTPUTS	=
2				Draw.	A.LLEONART			PROJECT Nº: 24981A	CAPS APLICATOR (CA-998/4)	+
1	DIN			Print.	22.07.2014					Sheet 373
	Modification	Date	Name	Norm	DIN	Nº ORDER 13.025		\Z69		Next 400

PATH: 24981A/Diagrams/01-Electrical schemes/373

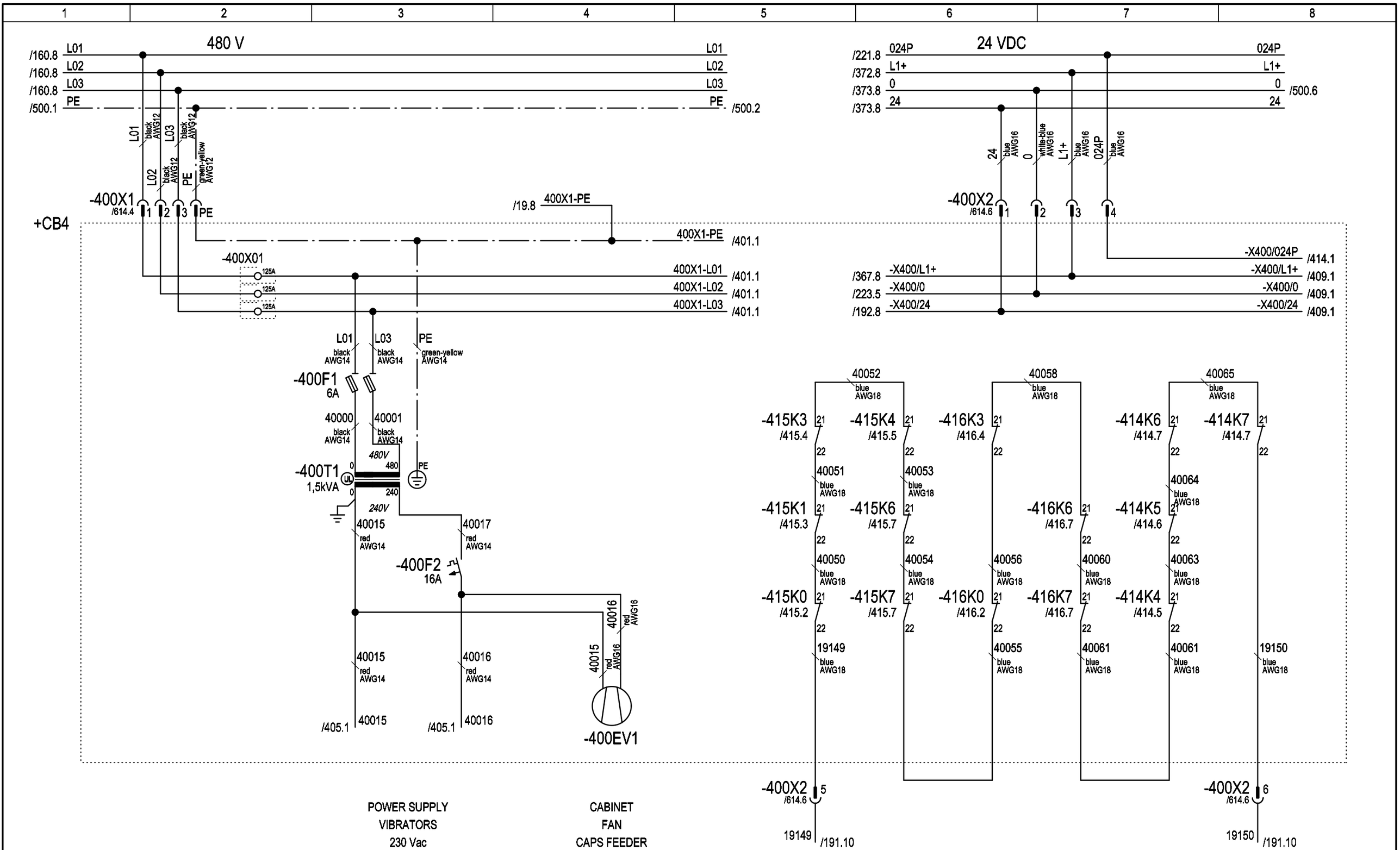

3				Date	\Z72	NURTURE, INC.	ACMAVOLPAK	TYPE OF MACHINE: SM-360 F4 WD	POWER	=
2				Draw.	A.LLEONART	(USA)		PROJECT Nº: 24981A	CAPS FEEDER	
1	DIN			Print.	22.07.2014					Sheet 400
	Modification	Date	Name	Norm	DIN	Nº ORDER 13.025		\Z69		Next 401

PATH: 24981A/Diagrams/01-Electrical schemes/400

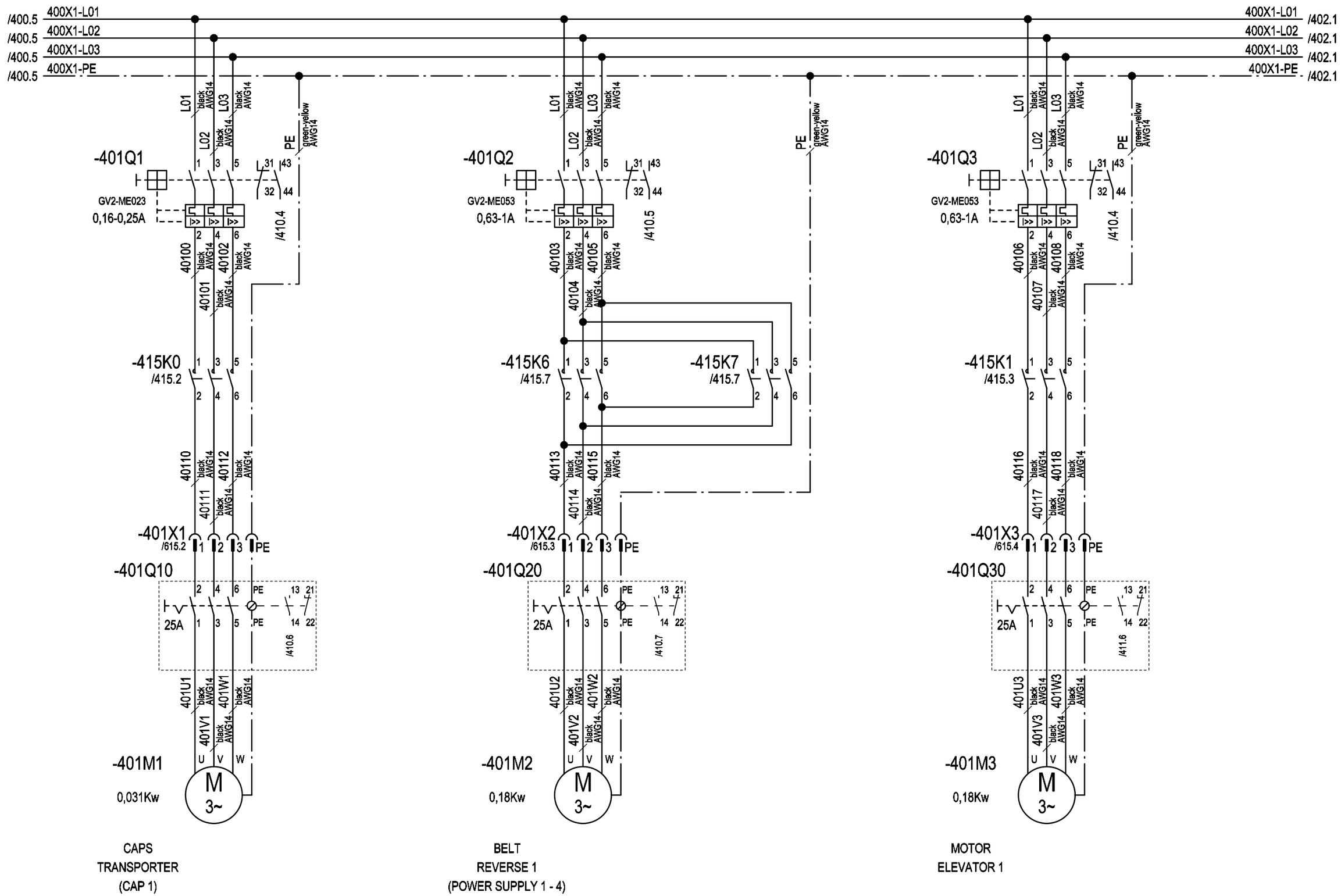

3				Date	\Z72	NURTURE, INC. (USA)	ACMAVOLPAK	TYPE OF MACHINE: SM-360 F4 WD	POWER CAPS FEEDER	=
2				Draw.	A.LLEONART			PROJECT Nº: 24981A		+CB4
1	DIN			Print.	22.07.2014					Sheet 401
	Modification	Date	Name	Norm	DIN	Nº ORDER 13.025		\Z69		Next 402

PATH: 24981A/Diagrams/01-Electrical schemes/401

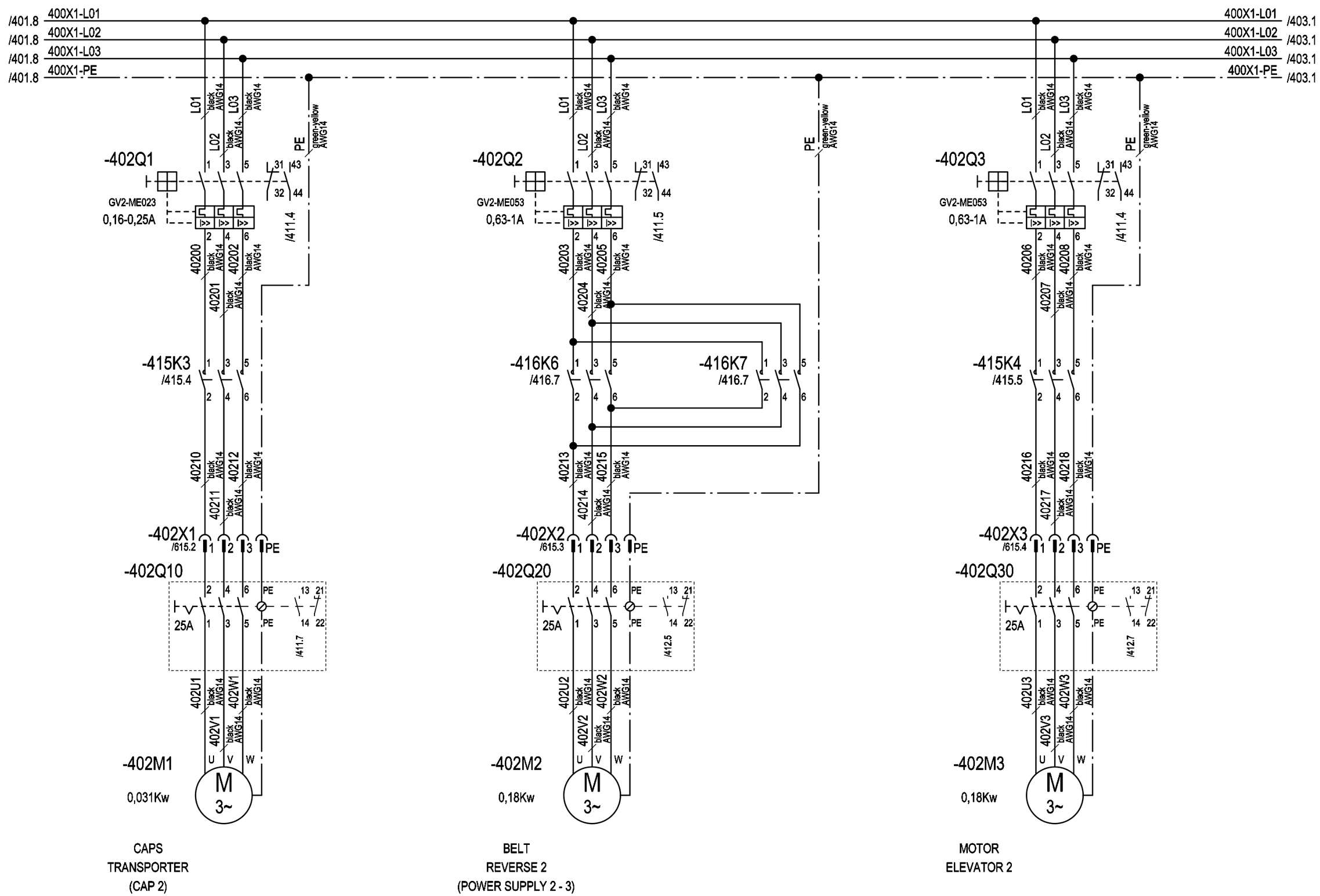

3				Date	\Z72	NURTURE, INC. (USA)	ACMAVOLPAK	TYPE OF MACHINE: SM-360 F4 WD	POWER CAPS FEEDER	=
2				Draw.	A.LLEONART			PROJECT Nº: 24981A		+CB4
1	DIN			Print.	22.07.2014					Sheet 402
	Modification	Date	Name	Norm	DIN	Nº ORDER 13.025		\Z69		Next 403

PATH: 24981A/Diagrams/01-Electrical schemes/402

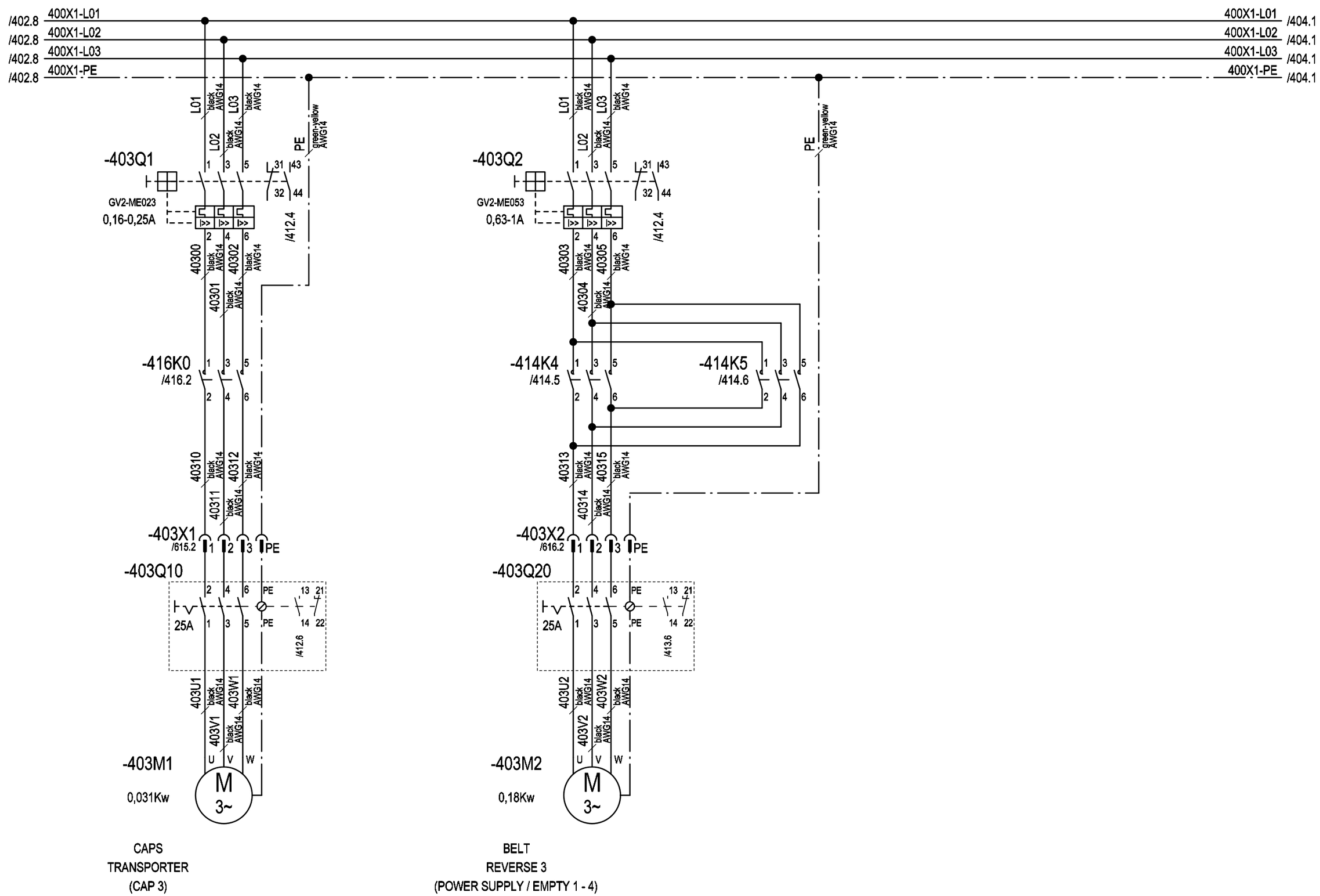

3				Date	\Z72	NURTURE, INC. (USA)	ACMAVOLPAK	TYPE OF MACHINE: SM-360 F4 WD	POWER CAPS FEEDER	=
2				Draw.	A.LLEONART			PROJECT Nº: 24981A		+CB4
1	DIN			Print.	22.07.2014					Sheet 403
	Modification	Date	Name	Norm	DIN	Nº ORDER 13.025		\Z69		Next 404

PATH: 24981A/Diagrams/01-Electrical schemes/403

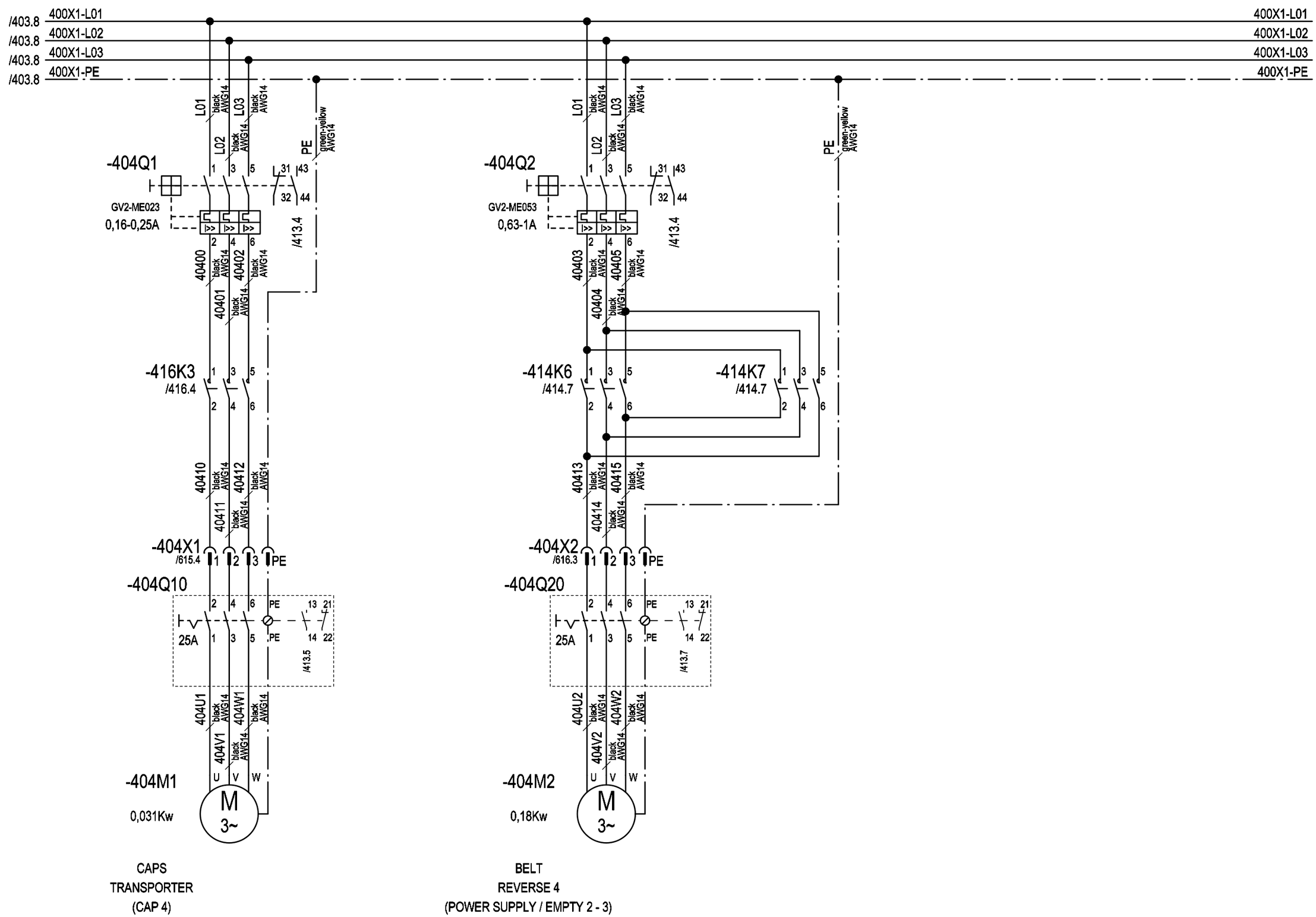

3				Date	\Z72	NURTURE, INC. (USA)	ACMAVOLPAK	TYPE OF MACHINE: SM-360 F4 WD	POWER CAPS FEEDER	=
2				Draw.	A.LLEONART			PROJECT Nº: 24981A		+CB4
1	DIN			Print.	22.07.2014					Sheet 404
	Modification	Date	Name	Norm	DIN	Nº ORDER 13.025		\Z69		Next 405

PATH: 24981A/Diagrams/01-Electrical schemes/404

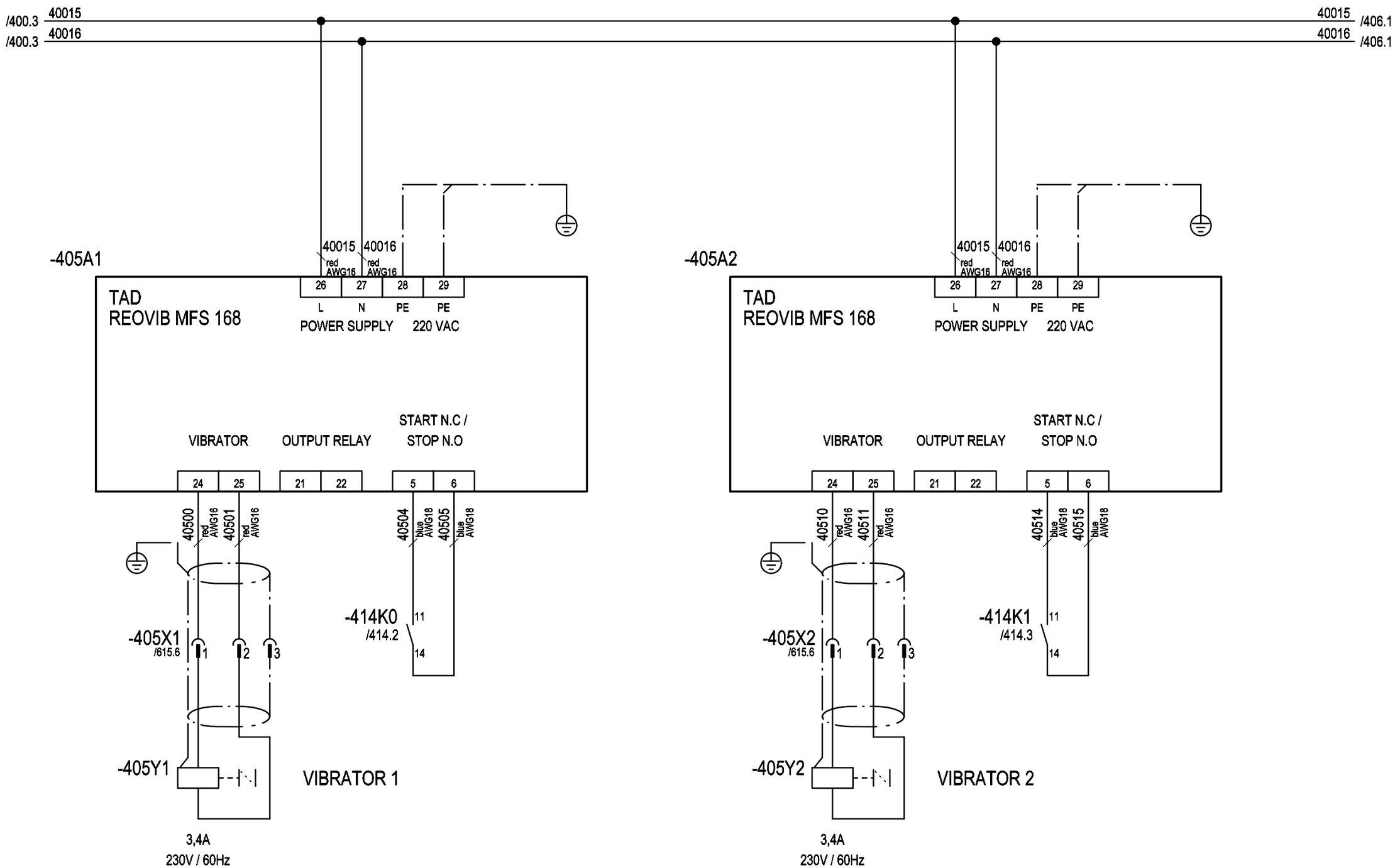

3				Date	\Z72	NURTURE, INC. (USA)	ACMAVOLPAK	TYPE OF MACHINE: SM-360 F4 WD	POWER VIBRATORS	=
2				Draw.	A.LLEONART			PROJECT Nº: 24981A		+CB4
1	DIN			Print.	22.07.2014					Sheet 405
	Modification	Date	Name	Norm	DIN	Nº ORDER 13.025		\Z69		Next 406

PATH: 24981A/Diagrams/01-Electrical schemes/405

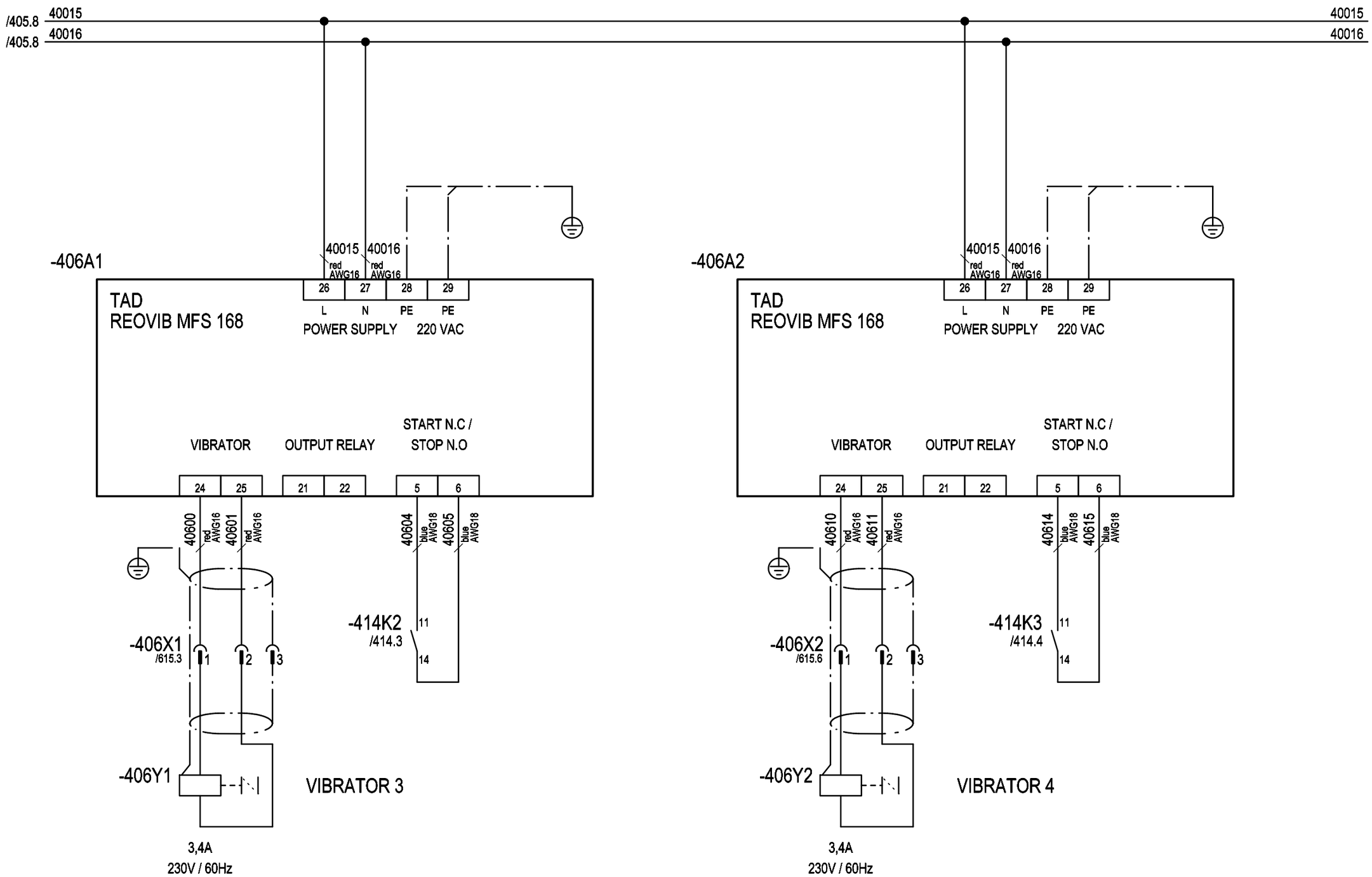

3				Date	\Z72	NURTURE, INC. (USA)	ACMAVOLPAK	TYPE OF MACHINE: SM-360 F4 WD	POWER VIBRATORS	=
2				Draw.	A.LLEONART			PROJECT Nº: 24981A		+CB4
1	DIN			Print.	22.07.2014					Sheet 406
	Modification	Date	Name	Norm	DIN	Nº ORDER 13.025		\Z69		Next 408

PATH: 24981A/Diagrams/01-Electrical schemes/406

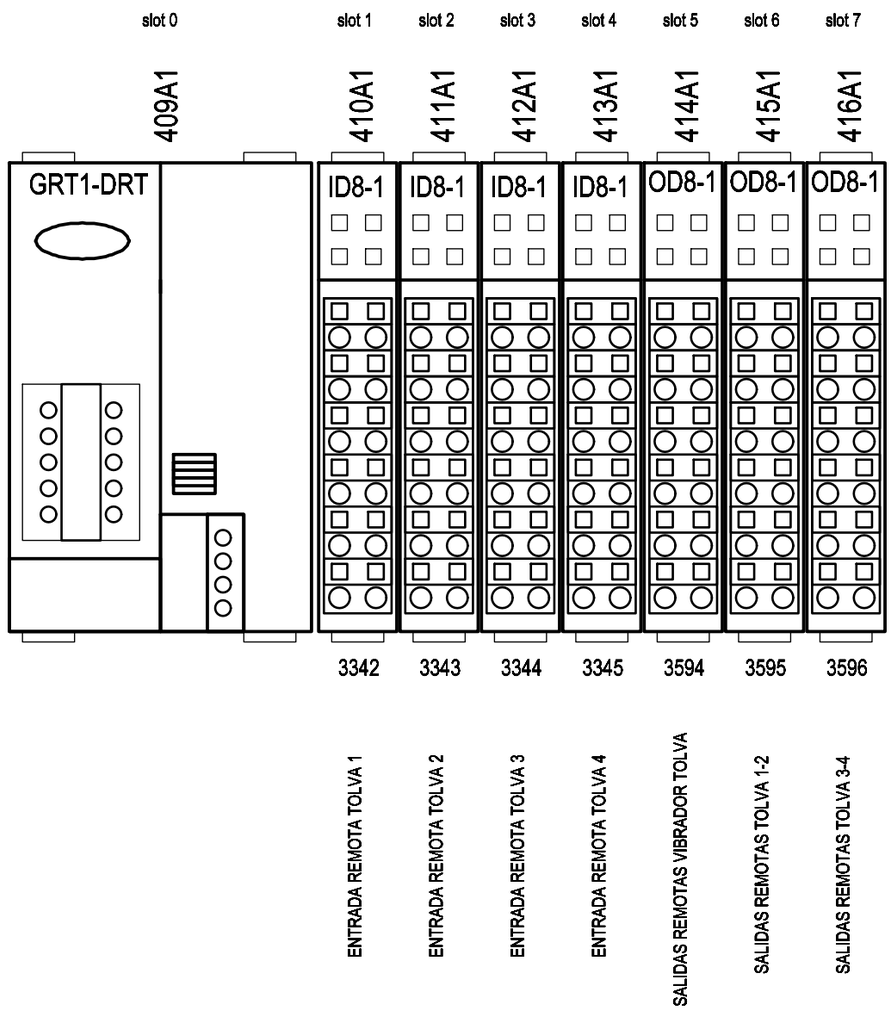

3				Date	\Z72	NURTURE, INC. (USA)	ACMAVOLPAK	TYPE OF MACHINE: SM-360 F4 WD	CONTROL CAPS FEEDER	=
2				Draw.	A.LLEONART			PROJECT Nº: 24981A		+CB4
1	DIN			Print.	22.07.2014					Sheet 408
	Modification	Date	Name	Norm	DIN	Nº ORDER 13.025		\Z69		Next 409

PATH: 24981A/Diagrams/01-Electrical schemes/408

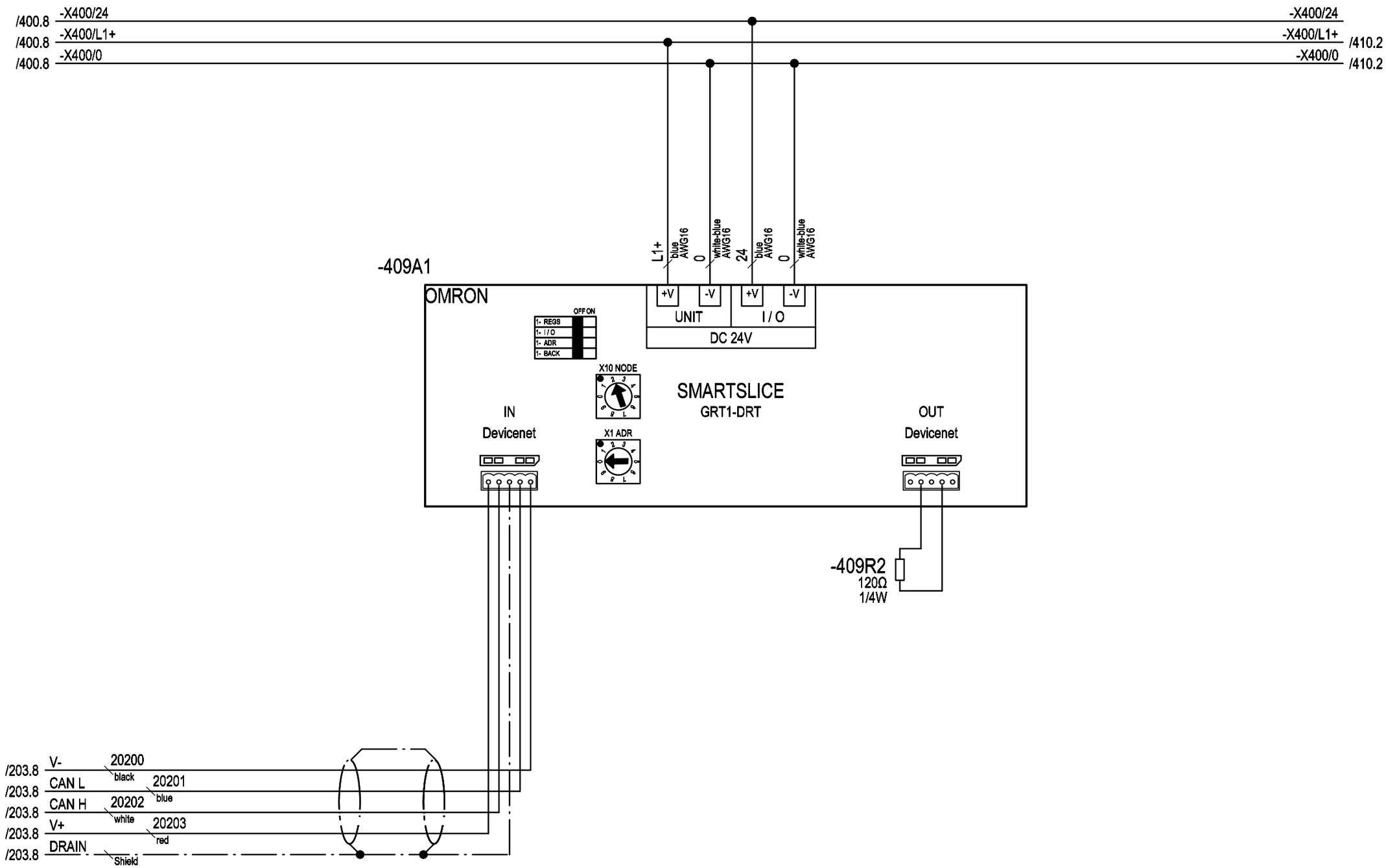

3				Date	\Z72	NURTURE, INC. (USA)	ACMAVOLPAK	TYPE OF MACHINE: SM-360 F4 WD	CONTROL CAPS FEEDER	=	
2				Draw.	A.LLEONART			PROJECT Nº: 24981A		+CB4	
1	DIN			Print.	22.07.2014					Sheet 409	
	Modification	Date	Name	Norm	DIN	Nº ORDER 13.025		\Z69		Next 410	

PATH: 24981A/Diagrams/01-Electrical schemes/409

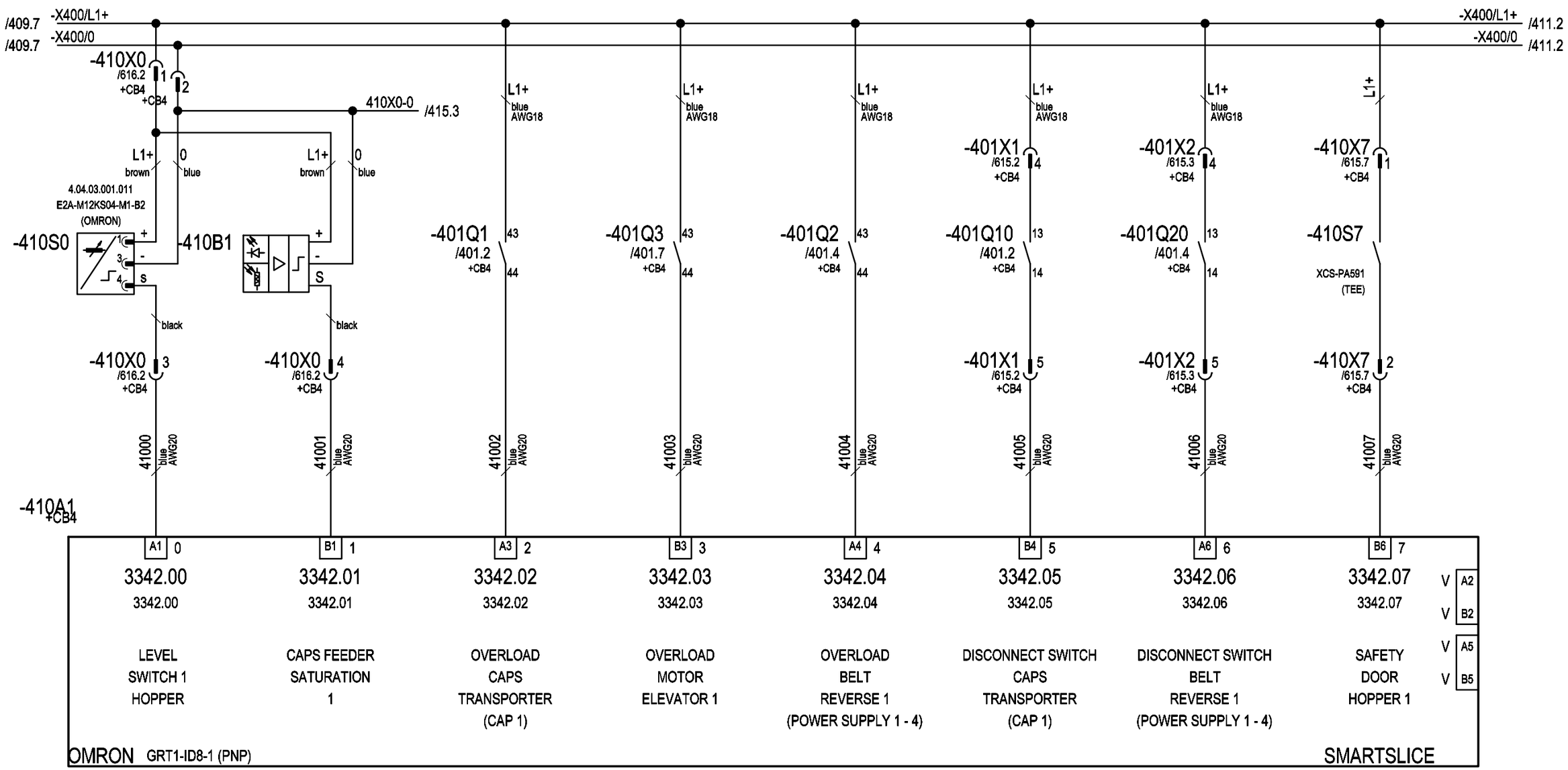

3				Date	\Z72	NURTURE, INC. (USA)	ACMAVOLPAK	TYPE OF MACHINE: SM-360 F4 WD	REMOTES INPUTS CAPS FEEDER
2				Draw.	A.LLEONART			PROJECT Nº: 24981A	
1	DIN			Print.	22.07.2014				Sheet 410
	Modification	Date	Name	Norm	DIN	Nº ORDER 13.025		\Z69	Next 411

PATH: 24981A/Diagrams/01-Electrical schemes/410

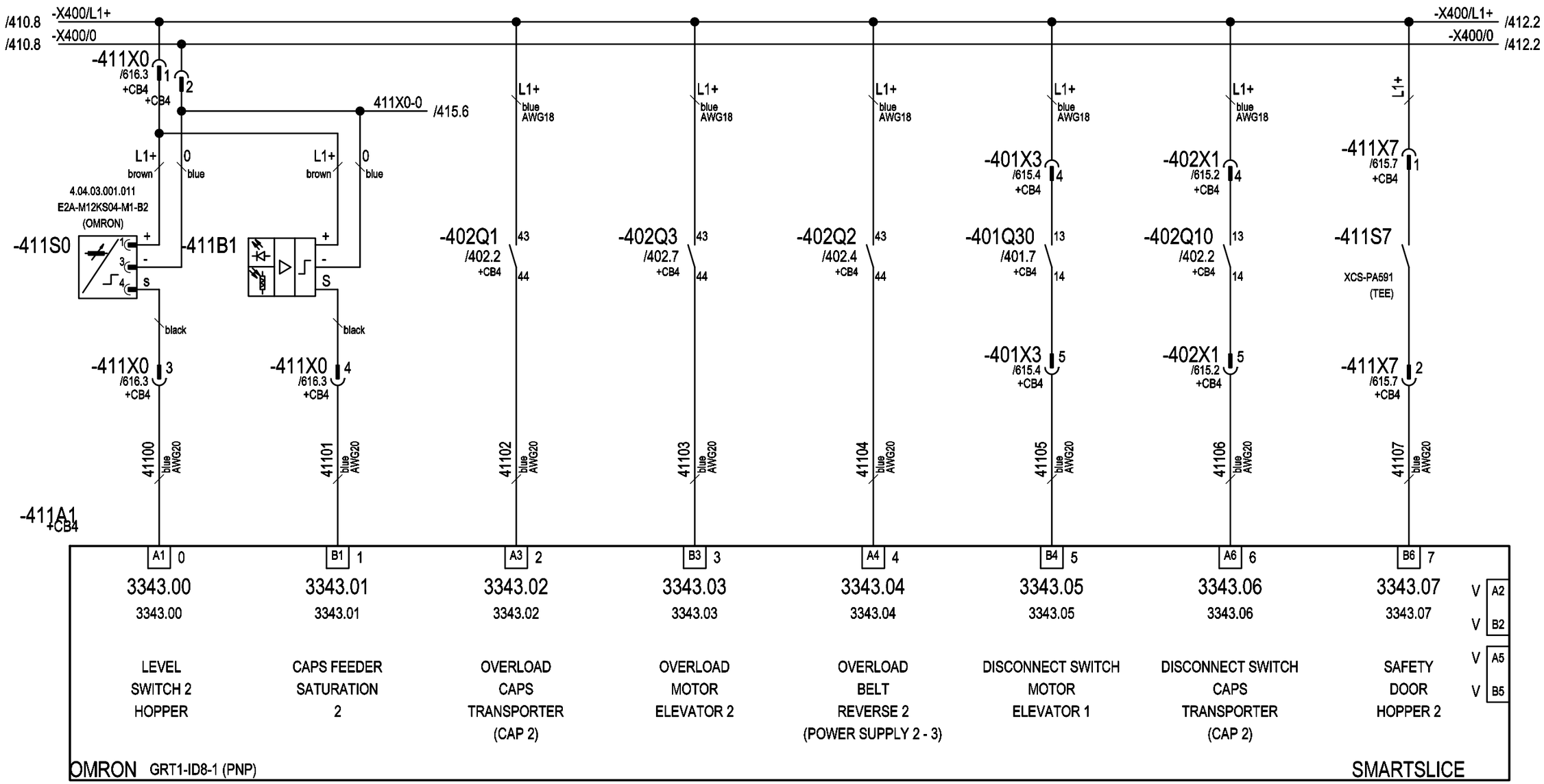

3				Date	\Z72	NURTURE, INC. (USA)	ACMAVOLPAK	TYPE OF MACHINE: SM-360 F4 WD	REMOTES INPUTS CAPS FEEDER	=
2				Draw.	A.LLEONART			PROJECT Nº: 24981A		
1	DIN			Print.	22.07.2014					Sheet 411
	Modification	Date	Name	Norm	DIN	Nº ORDER 13.025		\Z69		Next 412

PATH: 24981A/Diagrams/01-Electrical schemes/411

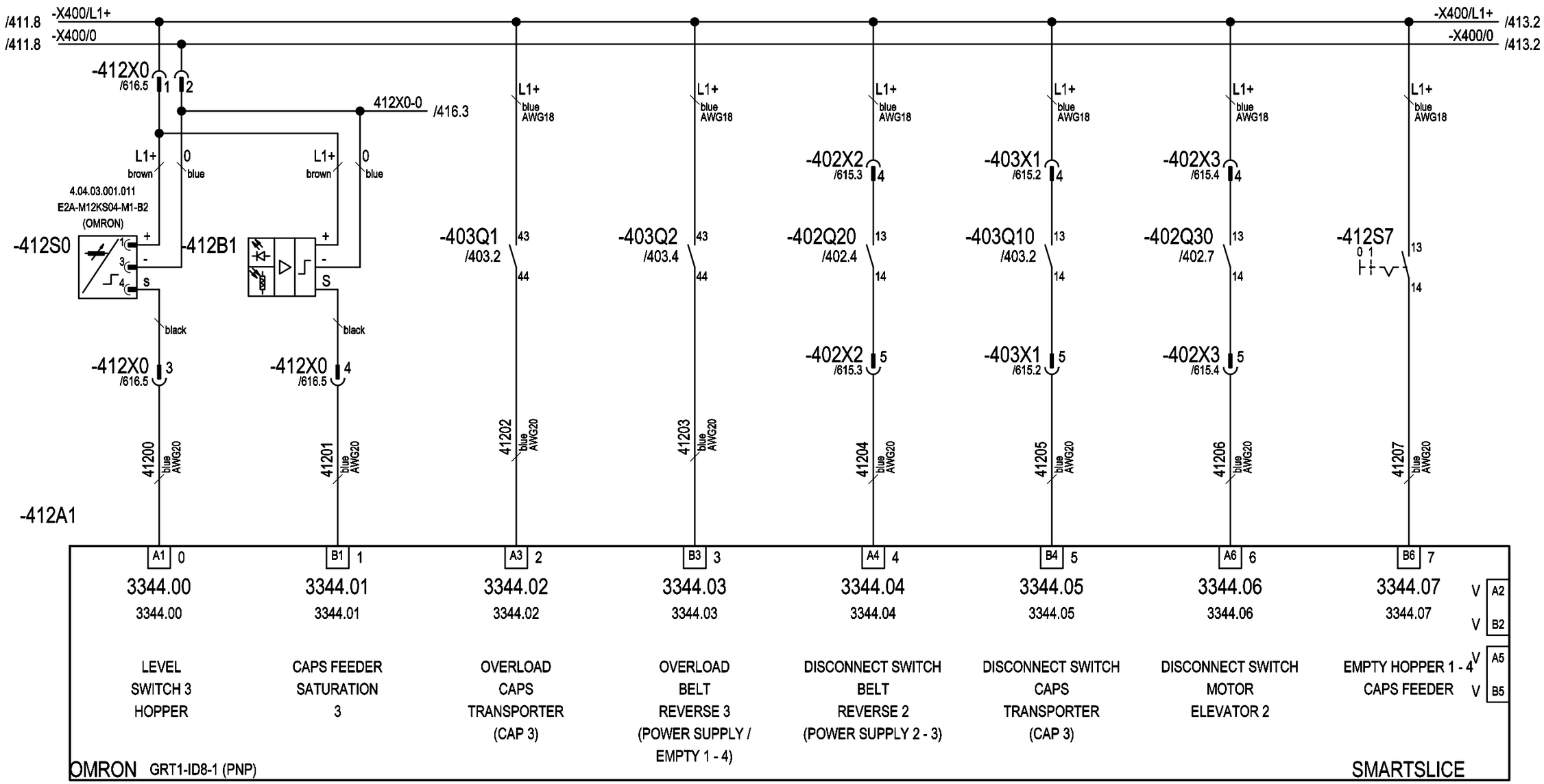

3				Date	\Z72	NURTURE, INC. (USA)	ACMAVOLPAK	TYPE OF MACHINE: SM-360 F4 WD	REMOTES INPUTS CAPS FEEDER	=
2				Draw.	A.LLEONART			PROJECT Nº: 24981A		+CB4
1	DIN			Print.	22.07.2014					Sheet 412
	Modification	Date	Name	Norm	DIN	Nº ORDER 13.025		\Z69		Next 413

PATH: 24981A/Diagrams/01-Electrical schemes/412

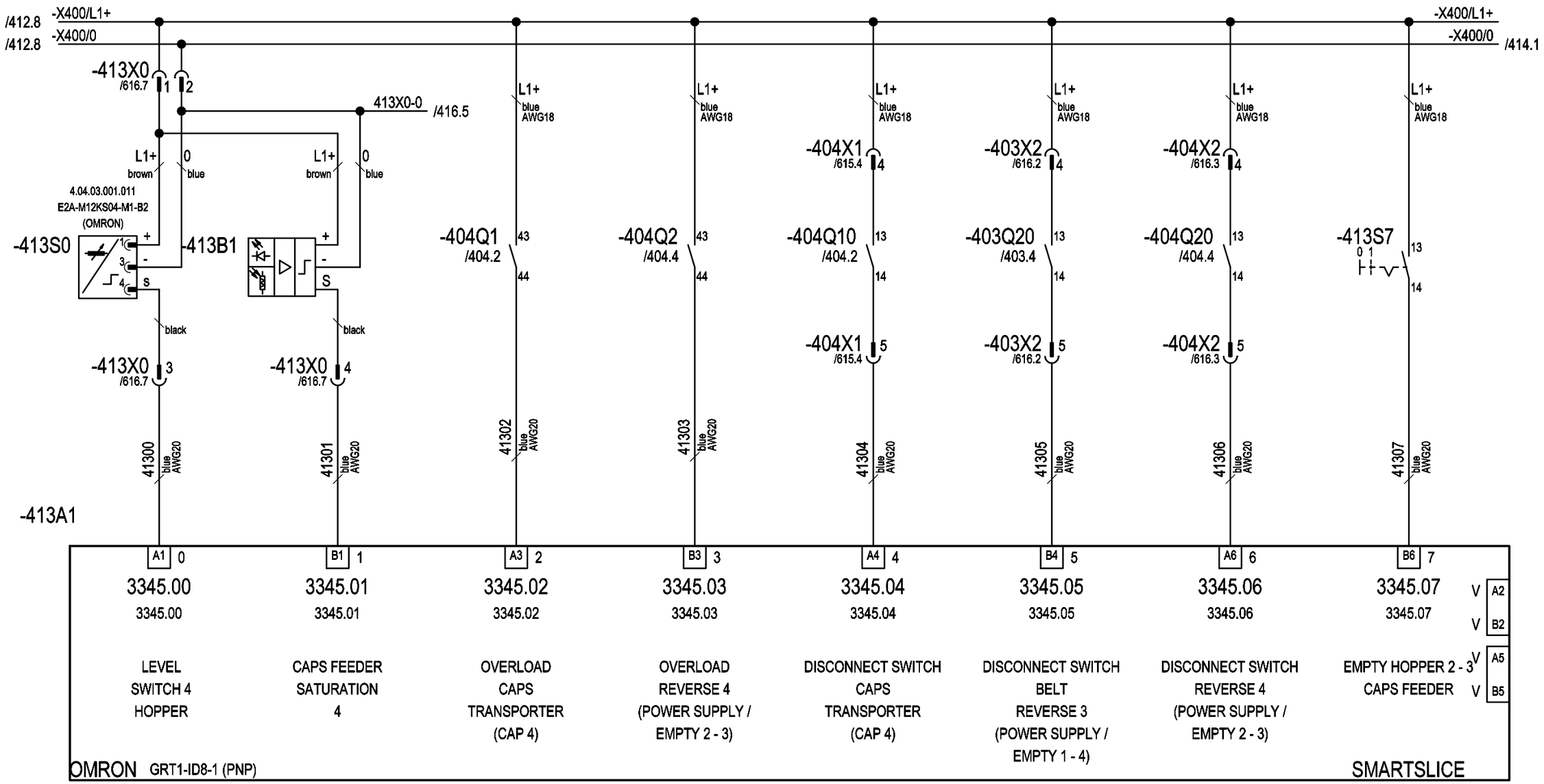

3				Date	\Z72	NURTURE, INC. (USA)	ACMAVOLPAK	TYPE OF MACHINE: SM-360 F4 WD	REMOTES INPUTS CAPS FEEDER	=
2				Draw.	A.LLEONART			PROJECT Nº: 24981A		+CB4
1	DIN			Print.	22.07.2014					Sheet 413
	Modification	Date	Name	Norm	DIN	Nº ORDER 13.025		\Z69		Next 414

PATH: 24981A/Diagrams/01-Electrical schemes/413

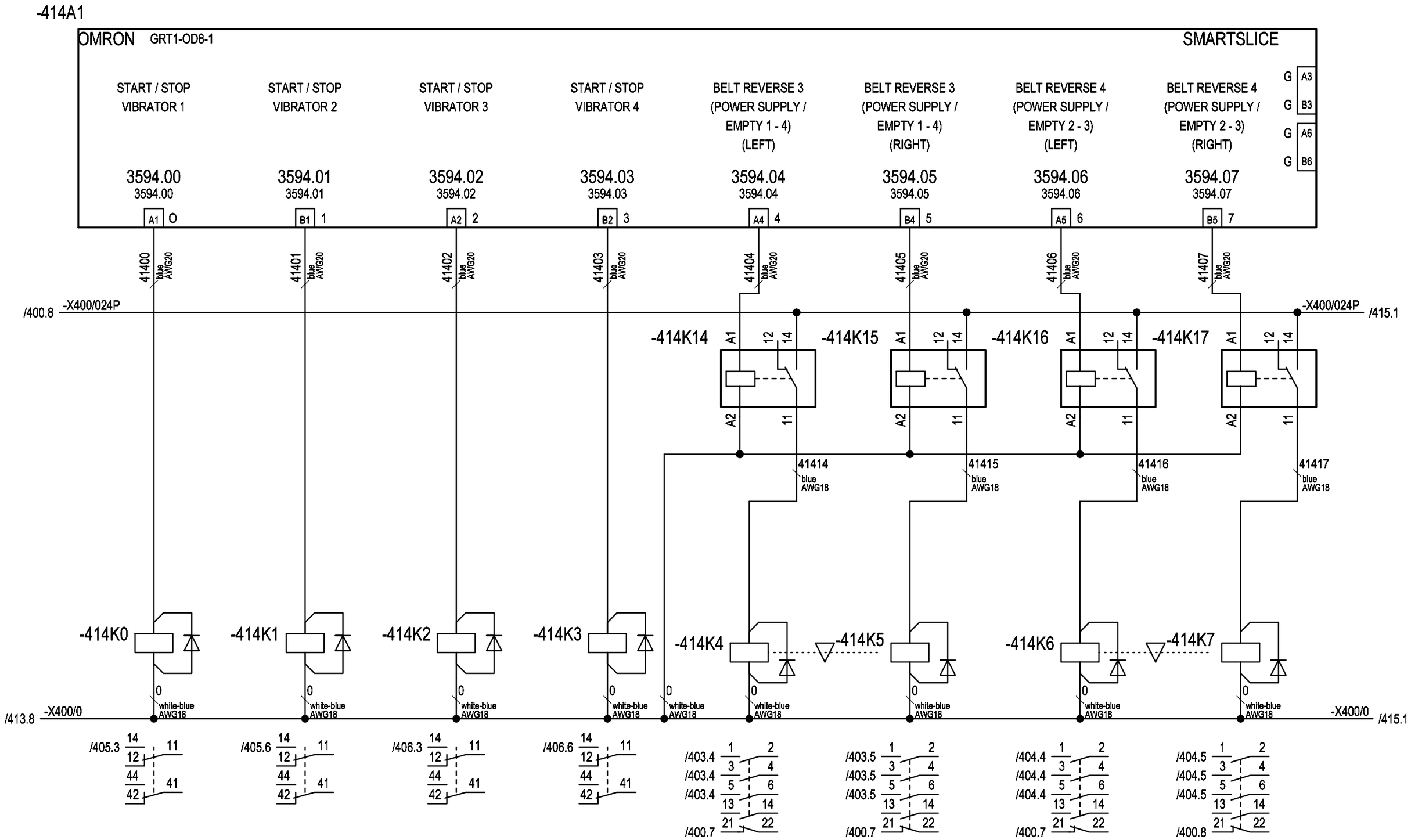

3				Date	\Z72	NURTURE, INC. (USA)	ACMAVOLPAK	TYPE OF MACHINE: SM-360 F4 WD	REMOTES OUTPUTS CAPS FEEDER	=
2				Draw.	A.LLEONART			PROJECT Nº: 24981A		+CB4
1	DIN			Print.	22.07.2014					Sheet 414
	Modification	Date	Name	Norm	DIN	Nº ORDER 13.025		\Z69		Next 415

PATH: 24981A/Diagrams/01-Electrical schemes/414

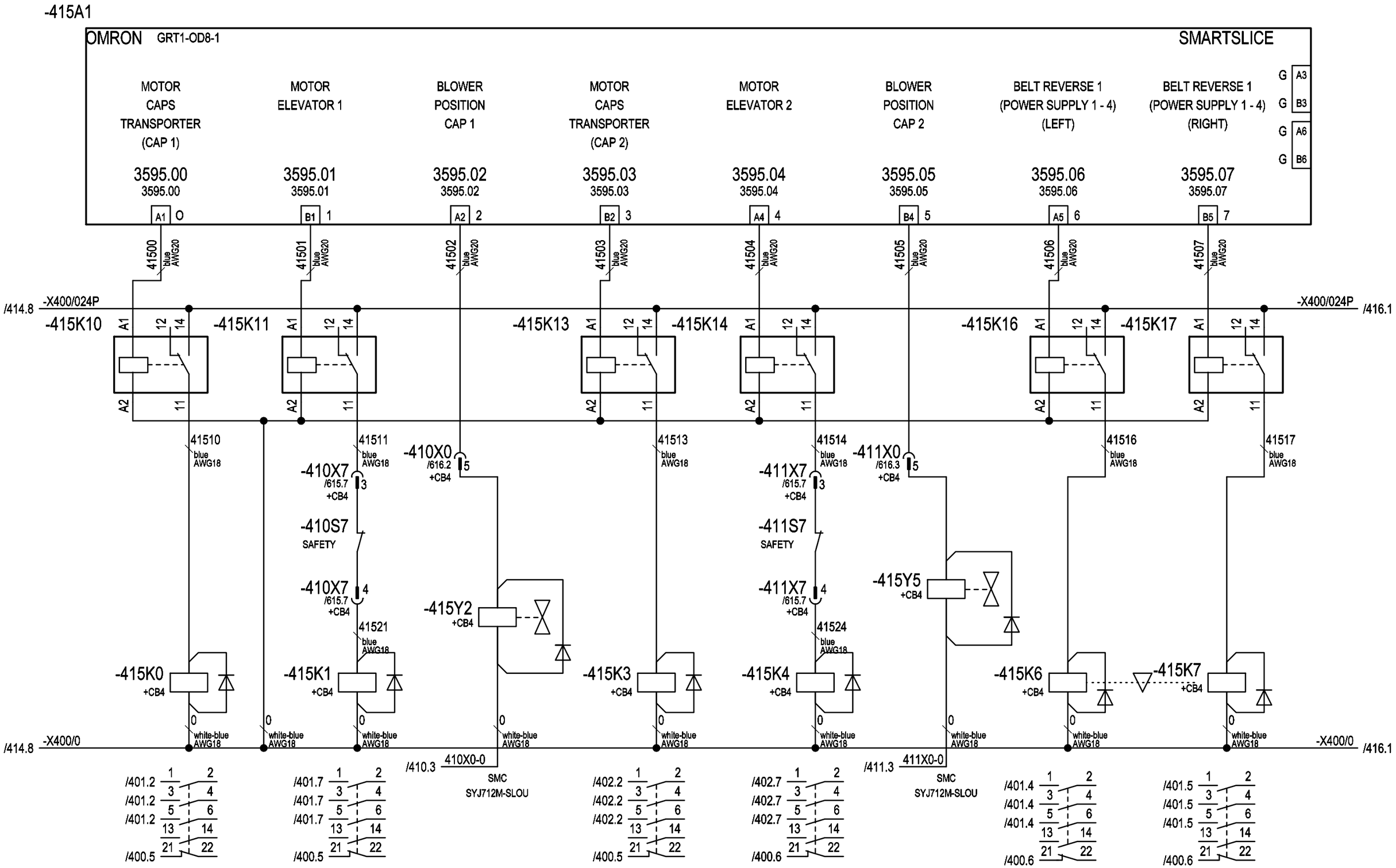

3				Date	\Z72	NURTURE, INC. (USA)	ACMAVOLPAK	TYPE OF MACHINE: SM-360 F4 WD	REMOTES OUTPUTS CAPS FEEDER	=
2				Draw.	A.LLEONART			PROJECT Nº: 24981A		
1	DIN			Print.	22.07.2014					Sheet 415
	Modification	Date	Name	Norm	DIN	Nº ORDER 13.025		\Z69		Next 416

PATH: 24981A/Diagrams/01-Electrical schemes/415

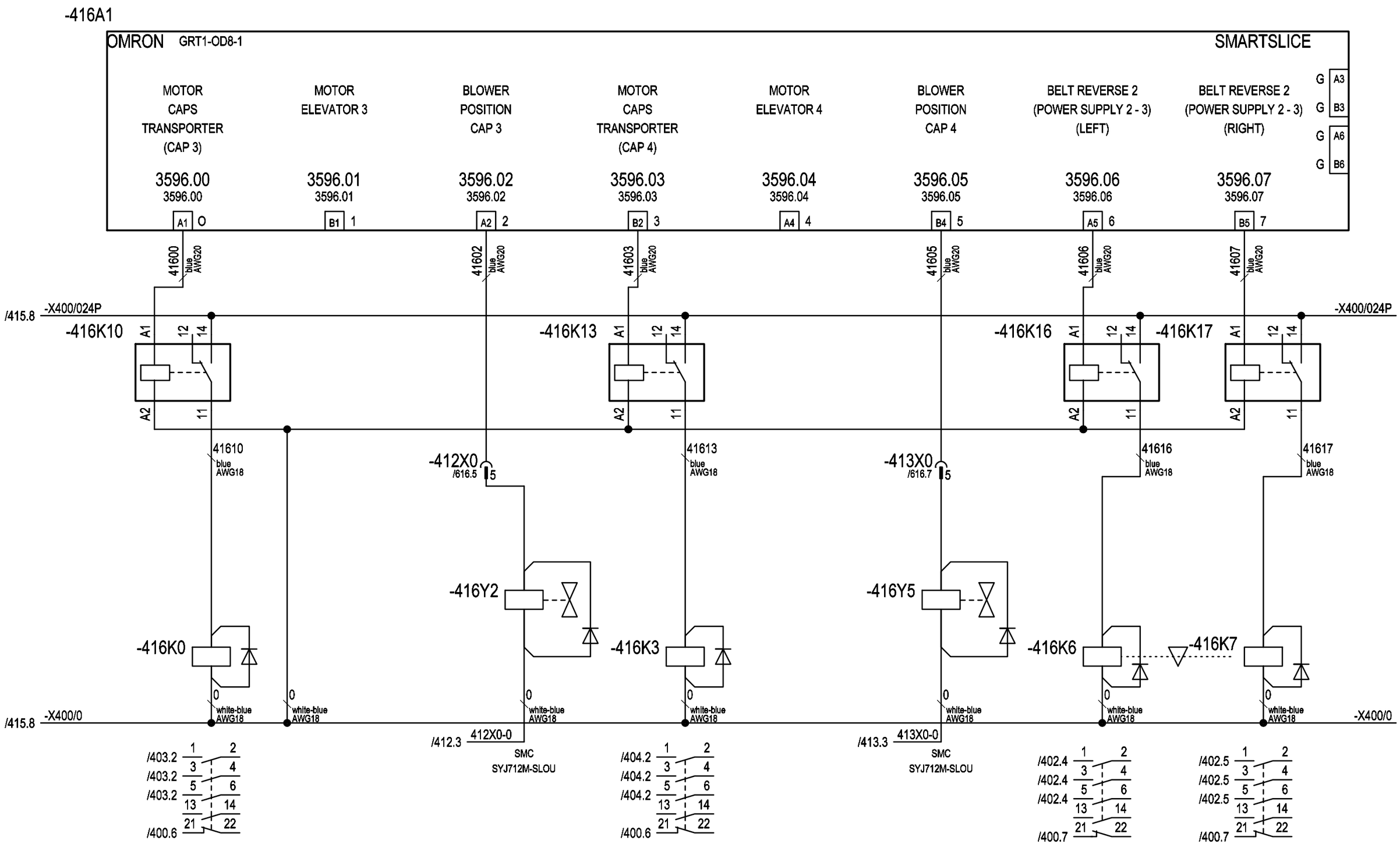

3				Date	\Z72	NURTURE, INC. (USA)	ACMAVOLPAK	TYPE OF MACHINE: SM-360 F4 WD	REMOTES OUTPUTS CAPS FEEDER
2				Draw.	A.LLEONART			PROJECT Nº: 24981A	
1	DIN			Print.	22.07.2014				
	Modification	Date	Name	Norm	DIN	Nº ORDER 13.025		\Z69	

= +CB4 Sheet 416 Next 425

PATH: 24981A/Diagrams/01-Electrical schemes/416

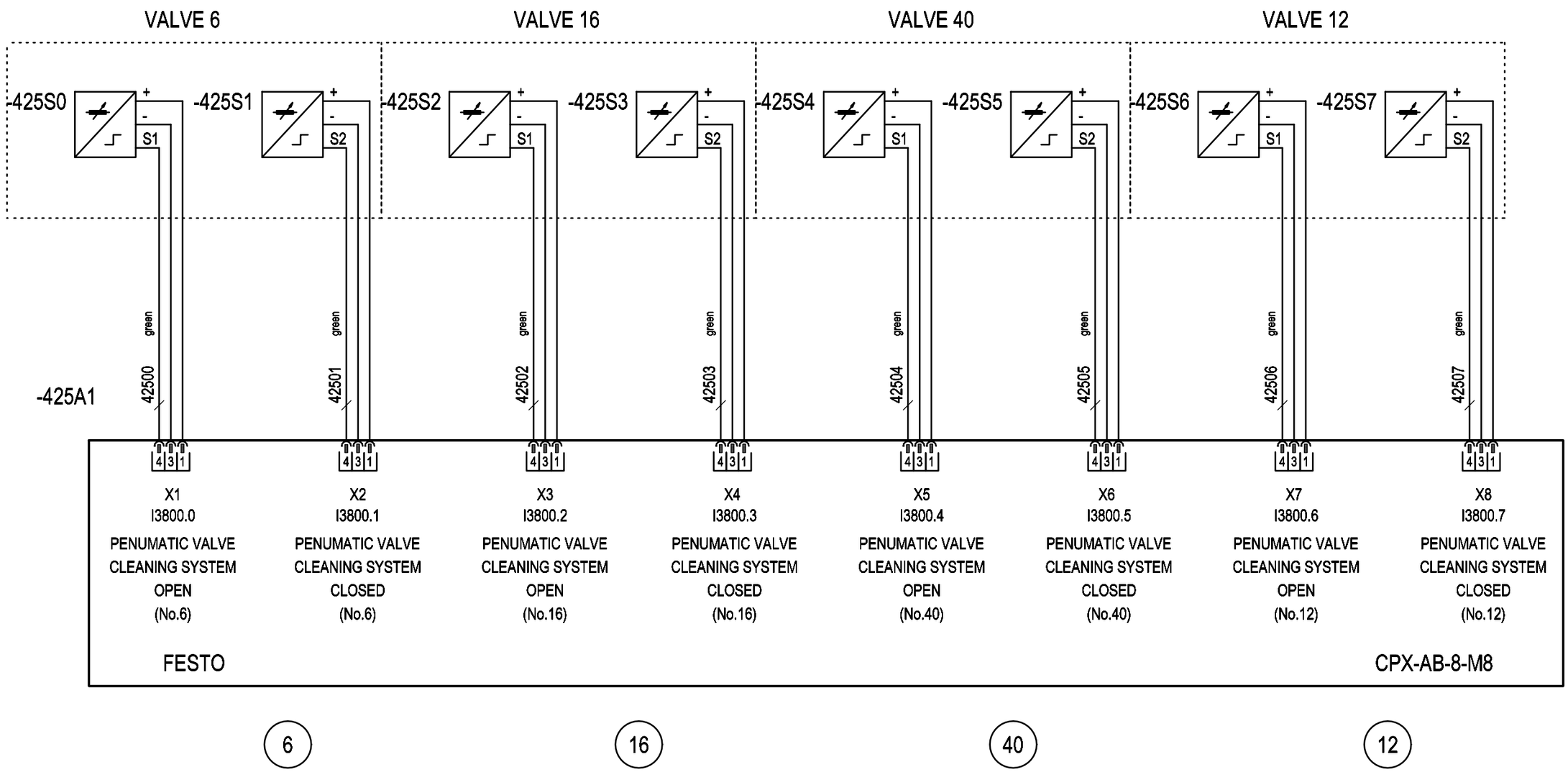

3				Date	\Z72	NURTURE, INC. (USA)	ACMAVOLPAK	TYPE OF MACHINE: SM-360 F4 WD	PLC's INPUTS (CIP / SIP) TERMINAL VALVES CPX	=
2				Draw.	A.LLEONART			PROJECT Nº: 24981A		+
1	DIN			Print.	22.07.2014					Sheet 425
	Modification	Date	Name	Norm	DIN	Nº ORDER 13.025		\Z69		Next 426

PATH: 24981A/Diagrams/01-Electrical schemes/425

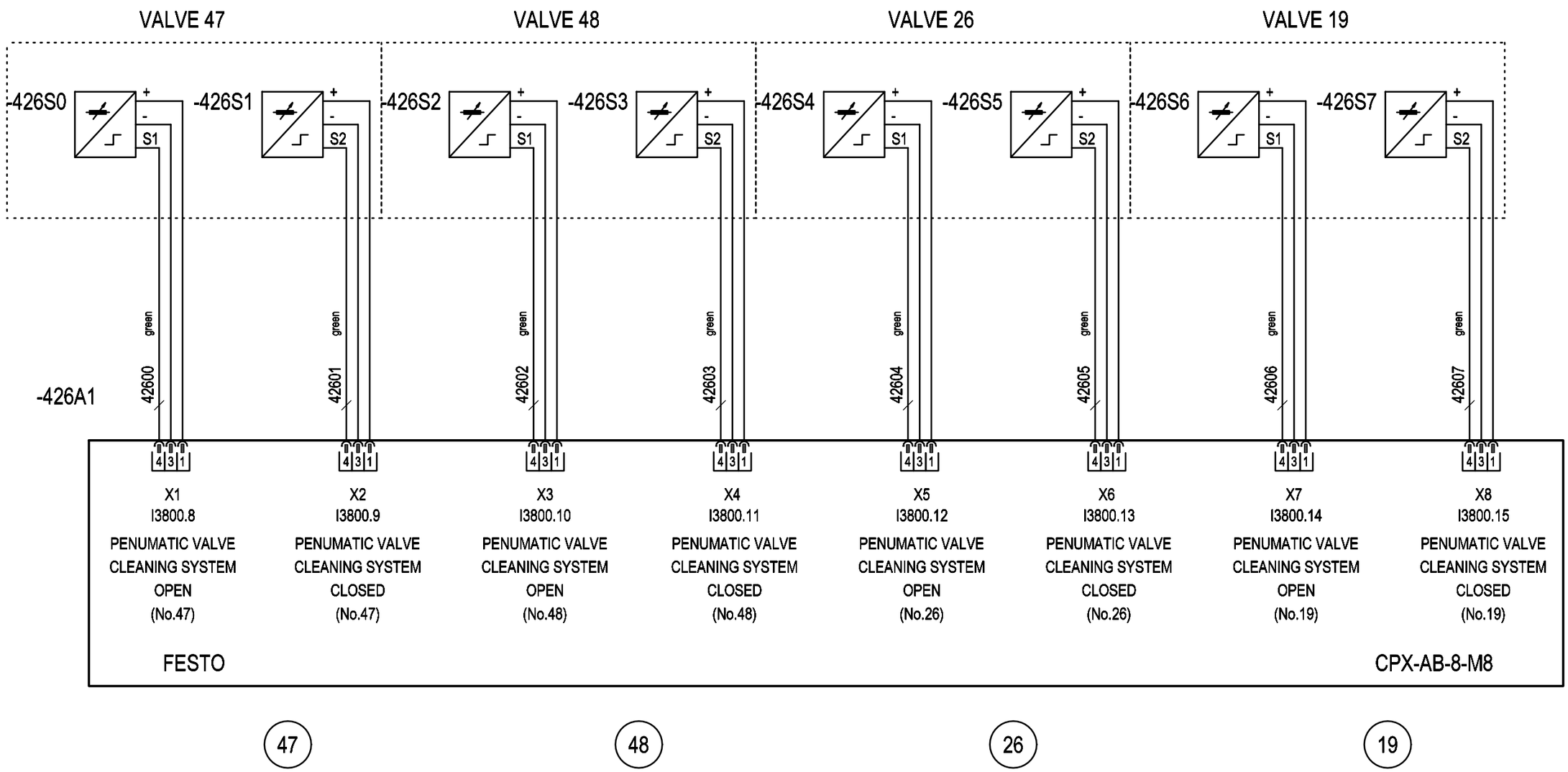

3				Date	\Z72	NURTURE, INC. (USA)	ACMAVOLPAK	TYPE OF MACHINE: SM-360 F4 WD	PLC's INPUTS (CIP / SIP) TERMINAL VALVES CPX	=
2				Draw.	A.LLEONART			PROJECT Nº: 24981A		+
1	DIN			Print.	22.07.2014					Sheet 426
	Modification	Date	Name	Norm	DIN	Nº ORDER 13.025		\Z69		Next 427

PATH: 24981A/Diagrams/01-Electrical schemes/426

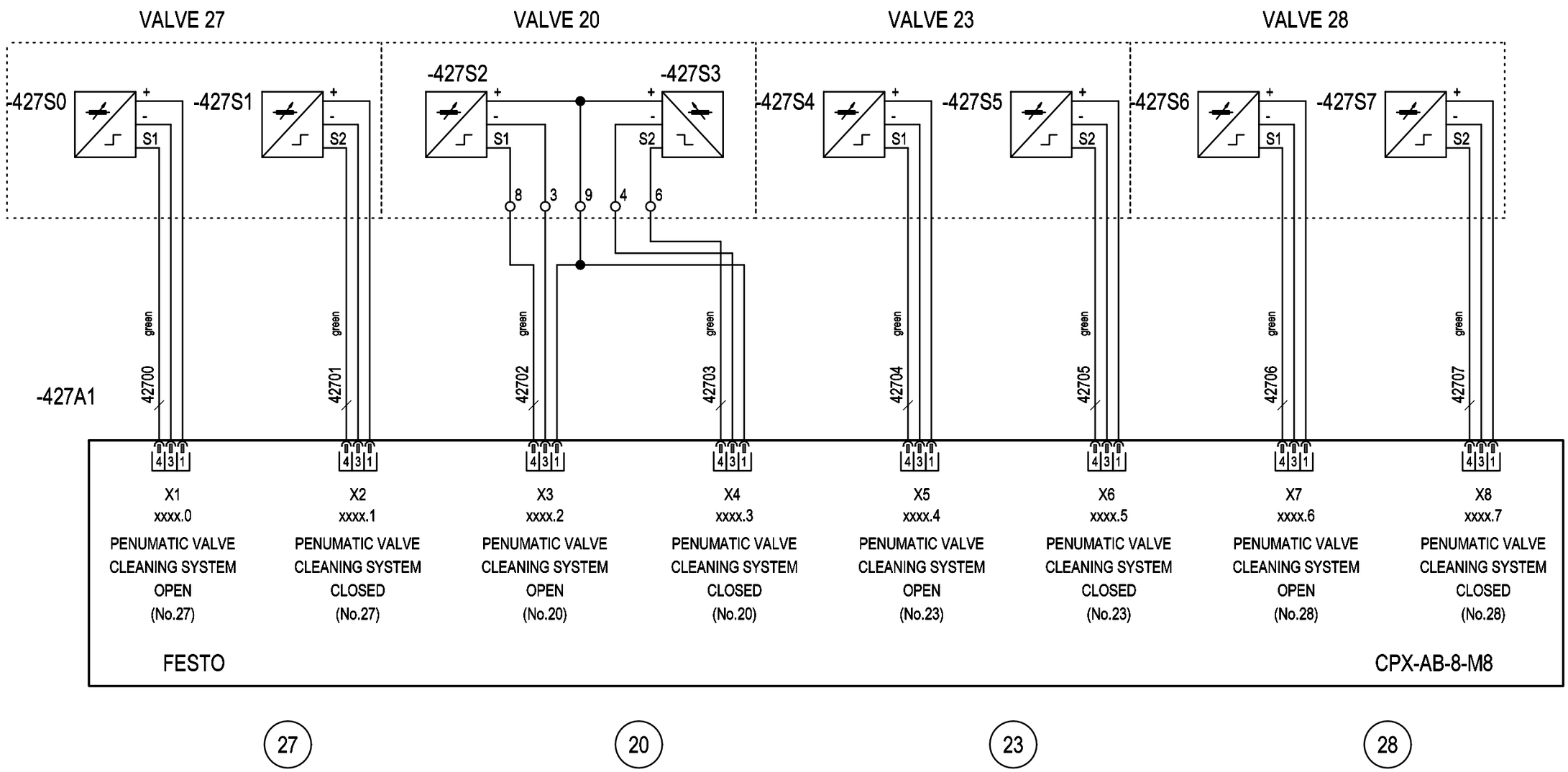

3				Date	\Z72	NURTURE, INC. (USA)	ACMAVOLPAK	TYPE OF MACHINE: SM-360 F4 WD	PLC's INPUTS (CIP / SIP) TERMINAL VALVES CPX	=
2				Draw.	A.LLEONART			PROJECT Nº: 24981A		+
1	DIN			Print.	22.07.2014					Sheet 427
	Modification	Date	Name	Norm	DIN	Nº ORDER 13.025		\Z69		Next 428

PATH: 24981A/Diagrams/01-Electrical schemes/427

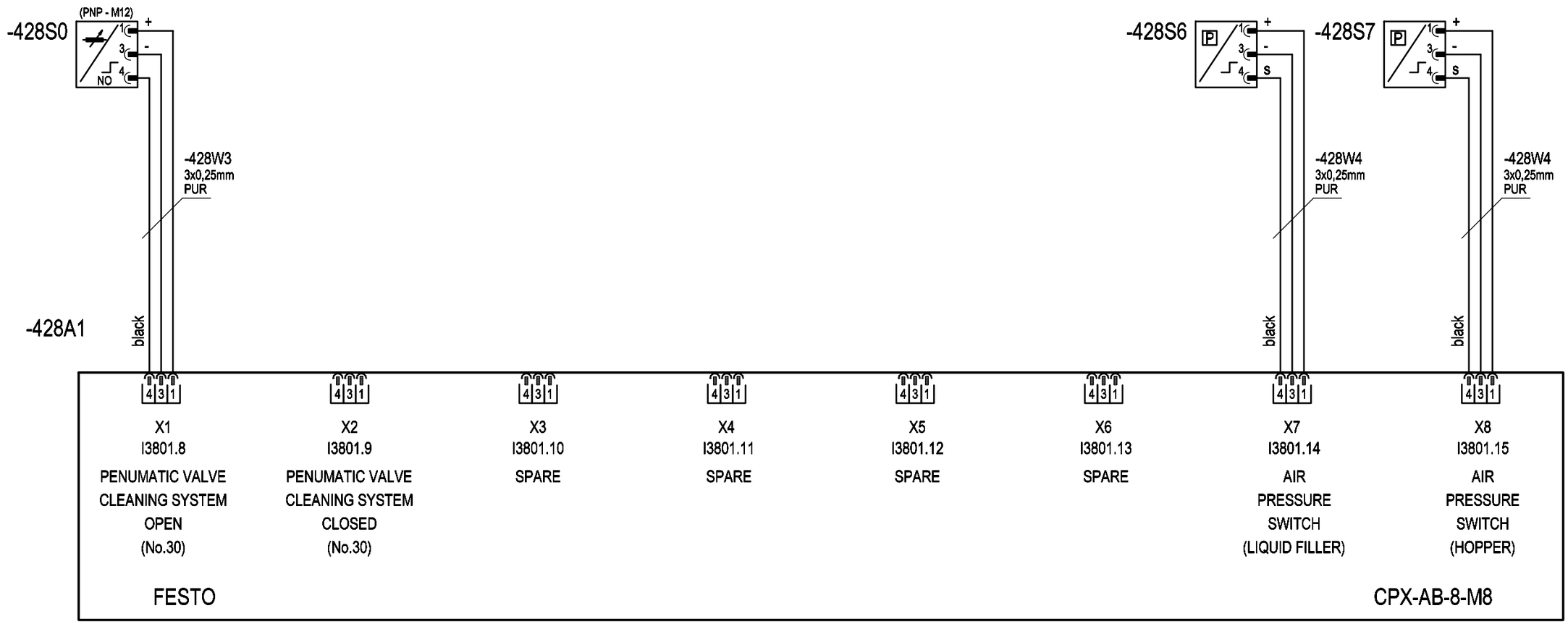

3				Date	\Z72	NURTURE, INC. (USA)	ACMAVOLPAK	TYPE OF MACHINE: SM-360 F4 WD	PLC's INPUTS (CIP / SIP) TERMINAL VALVES CPX	=	
2				Draw.	A.LLEONART			PROJECT Nº: 24981A		+	
1	DIN			Print.	22.07.2014					Sheet 428	
	Modification	Date	Name	Norm	DIN	Nº ORDER 13.025		\Z69		Next 431	

PATH: 24981A/Diagrams/01-Electrical schemes/428

1	2	3	4	5	6	7	8

-431A0	-431A1	-431A2	-431A3	-431A4	-431A5	-431A6	-431A7
Led 12 / 2	Led 12 / 2	Led 12 / 2	Led 12 / 2	Led 12 / 2	Led 12 / 2	Led 12 / 2	Led 12 / 2
POSITION NOZZLE 2 (CLEANING) (No.31-2)	POSITION NOZZLE 4 (CLEANING) (No.31-4)	POSITION NOZZLE 6 (CLEANING) (No.31-6)	JET CUTTER NOZZLE 3-4 (CLEANING) (No.65)	PENUMATIC VALVE CLEANING SYSTEM (No.6)	PENUMATIC VALVE CLEANING SYSTEM (No.40)	PENUMATIC VALVE CLEANING SYSTEM (No.47)	PENUMATIC VALVE CLEANING SYSTEM (No.26)
O3900.1	O3900.3	O3900.5	O3900.7	O3900.9	O3900.11	O3900.13	O3900.15
Out 1	Out 1	Out 1	Out 1	Out 1	Out 1	Out 1	Out 1
-431Y1	-431Y3	-431Y5	-431Y7	-431Y9	-431Y11	-431Y13	-431Y15
PLC list: 1 CPX Festo	PLC list: 1 CPX Festo	PLC list: 1 CPX Festo	PLC list: 1 CPX Festo	PLC list: 1 CPX Festo	PLC list: 1 CPX Festo	PLC list: 1 CPX Festo	PLC list: 1 CPX Festo
-431Y0	-431Y2	-431Y4	-431Y6	-431Y8	-431Y10	-431Y12	-431Y14
Out 0	Out 0	Out 0	Out 0	Out 0	Out 0	Out 0	Out 0
O3900.0	O3900.2	O3900.4	O3900.6	O3900.8	O3900.10	O3900.12	O3900.14
POSITION NOZZLE 1 (CLEANING) (No.31-1)	POSITION NOZZLE 3 (CLEANING) (No.31-3)	POSITION NOZZLE 5 (CLEANING) (No.31-5)	JET CUTTER NOZZLE 1-2 (CLEANING) (No.64)	JET CUTTER NOZZLE 5-6 (CLEANING) (No.66)	PENUMATIC VALVE CLEANING SYSTEM (No.16)	PENUMATIC VALVE CLEANING SYSTEM (No.12)	PENUMATIC VALVE CLEANING SYSTEM (No.48)
FESTO	FESTO	FESTO	FESTO	FESTO	FESTO	FESTO	FESTO
Led 14 / 4	Led 14 / 4	Led 14 / 4	Led 14 / 4	Led 14 / 4	Led 14 / 4	Led 14 / 4	Led 14 / 4
X	X	X	X	X	X	X	X
31-2	31-4	31-6	65	6	40	47	26
31-1	31-3	31-5	64	66	16	12	48

3				Date	\Z72	NURTURE, INC. (USA)	ACMAVOLPAK	TYPE OF MACHINE: SM-360 F4 WD
2				Draw.	A.LLEONART			PROJECT Nº: 24981A
1	DIN			Print.	22.07.2014			\Z69
	Modification	Date	Name	Norm	DIN	Nº ORDER 13.025		

PLC's OUTPUTS
(CIP / SIP)
TERMINAL VALVES CPX

=
+
Sheet 431
Next 432

PATH: 24981A/Diagrams/01-Electrical schemes/431

1	2	3	4	5	6	7	8

-432A0	-432A1	-432A2	-432A3	-432A4	-432A5
Led 12 / 2	Led 12 / 2	Led 12 / 2	Led 12 / 2	Led 12 / 2	Led 12 / 2
PENUMATIC VALVE CLEANING SYSTEM (No.27)	PENUMATIC VALVE CLEANING SYSTEM (No.23)	PENUMATIC VALVE CLEANING SYSTEM (No.30)	SECURITY VALVE CIP (8)	SPARE	SPARE
O3901.1	O3901.3	O3901.5	O3901.7	O3901.9	O3901.11
Out 1	Out 1	Out 1	Out 1	Out 1	Out 1
-432Y1	-432Y3	-432Y5	-432Y7	-432Y9	-432Y11
PLC list: 1 CPX Festo	PLC list: 1 CPX Festo	PLC list: 1 CPX Festo	PLC list: 1 CPX Festo	PLC list: 1 CPX Festo	PLC list: 1 CPX Festo
-432Y0	-432Y2	-432Y4	-432Y6	-432Y8	-432Y10
Out 0	Out 0	Out 0	Out 0	Out 0	Out 0
O3901.0	O3901.2	O3901.4	O3901.6	O3901.8	O3901.10
PENUMATIC VALVE CLEANING SYSTEM (No.19)	PENUMATIC VALVE CLEANING SYSTEM (No.20)	PENUMATIC VALVE CLEANING SYSTEM (No.28)	COOLING HOPPER	SPARE	SPARE
FESTO	FESTO	FESTO	FESTO	FESTO	FESTO
Led 14 / 4	Led 14 / 4	Led 14 / 4	Led 14 / 4	Led 14 / 4	Led 14 / 4
X	X	X	X	X	X
27	23	30	2	L	L
19	20	28	80	L	L

3				Date	\Z72	NURTURE, INC. (USA)	ACMAVOLPAK	TYPE OF MACHINE: SM-360 F4 WD	PLC's OUTPUTS (CIP / SIP) TERMINAL VALVES CPX	=
2				Draw.	A.LLEONART			PROJECT Nº: 24981A		+
1	DIN			Print.	22.07.2014					Sheet 432
	Modification	Date	Name	Norm	DIN	Nº ORDER 13.025		\Z69		Next 500

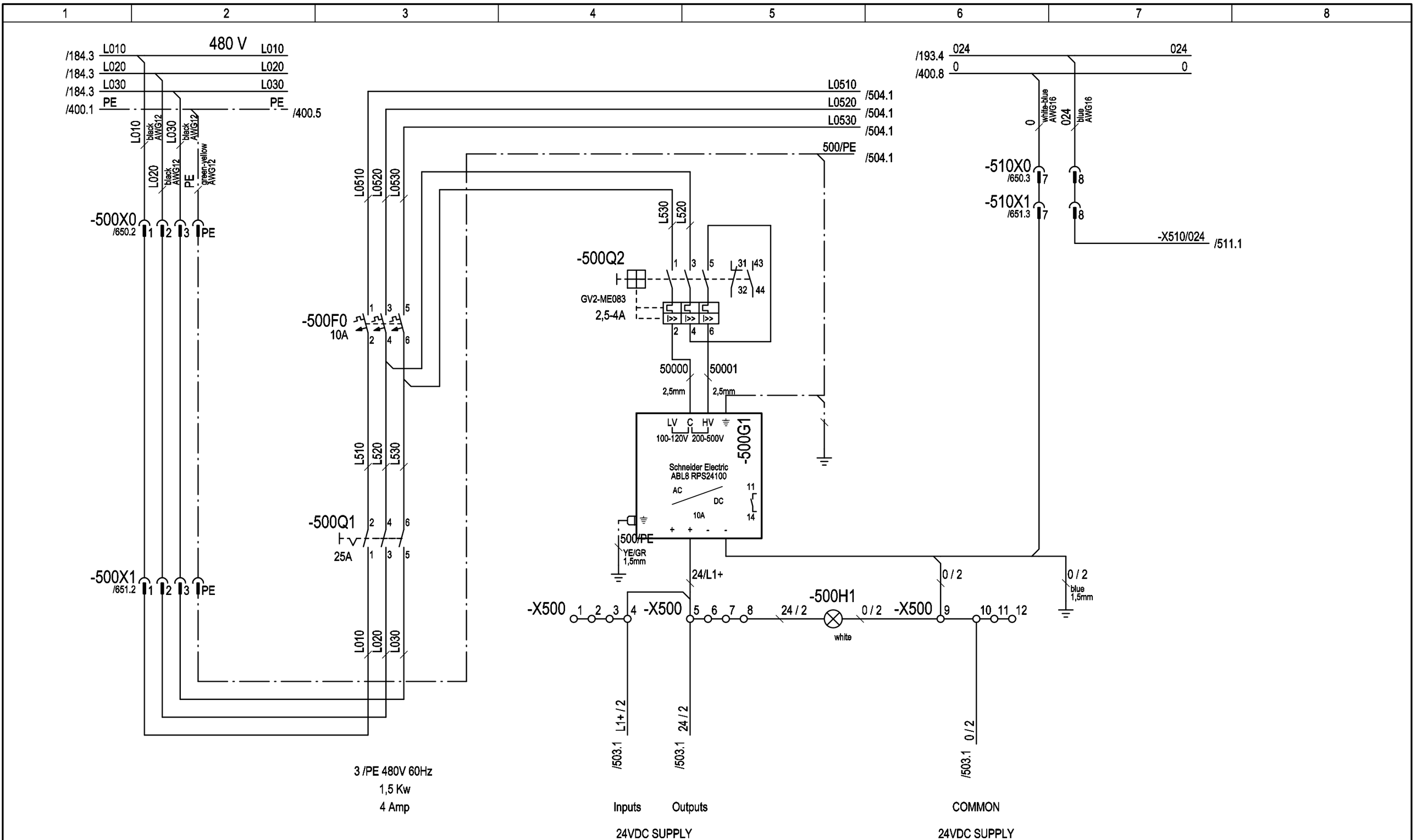

3				Date	\Z72	NURTURE, INC. (USA)	ACMAVOLPAK	TYPE OF MACHINE: SM-360 F4 WD	MAIN POWER REEL SPLICE AUTOMATIC
2				Draw.	A.LLEONART			PROJECT Nº: 24981A	
1	DIN			Print.	22.07.2014				Sheet 500
	Modification	Date	Name	Norm	DIN	Nº ORDER 13.025		\Z69	Next 503

PATH: 24981A/Diagrams/01-Electrical schemes/500

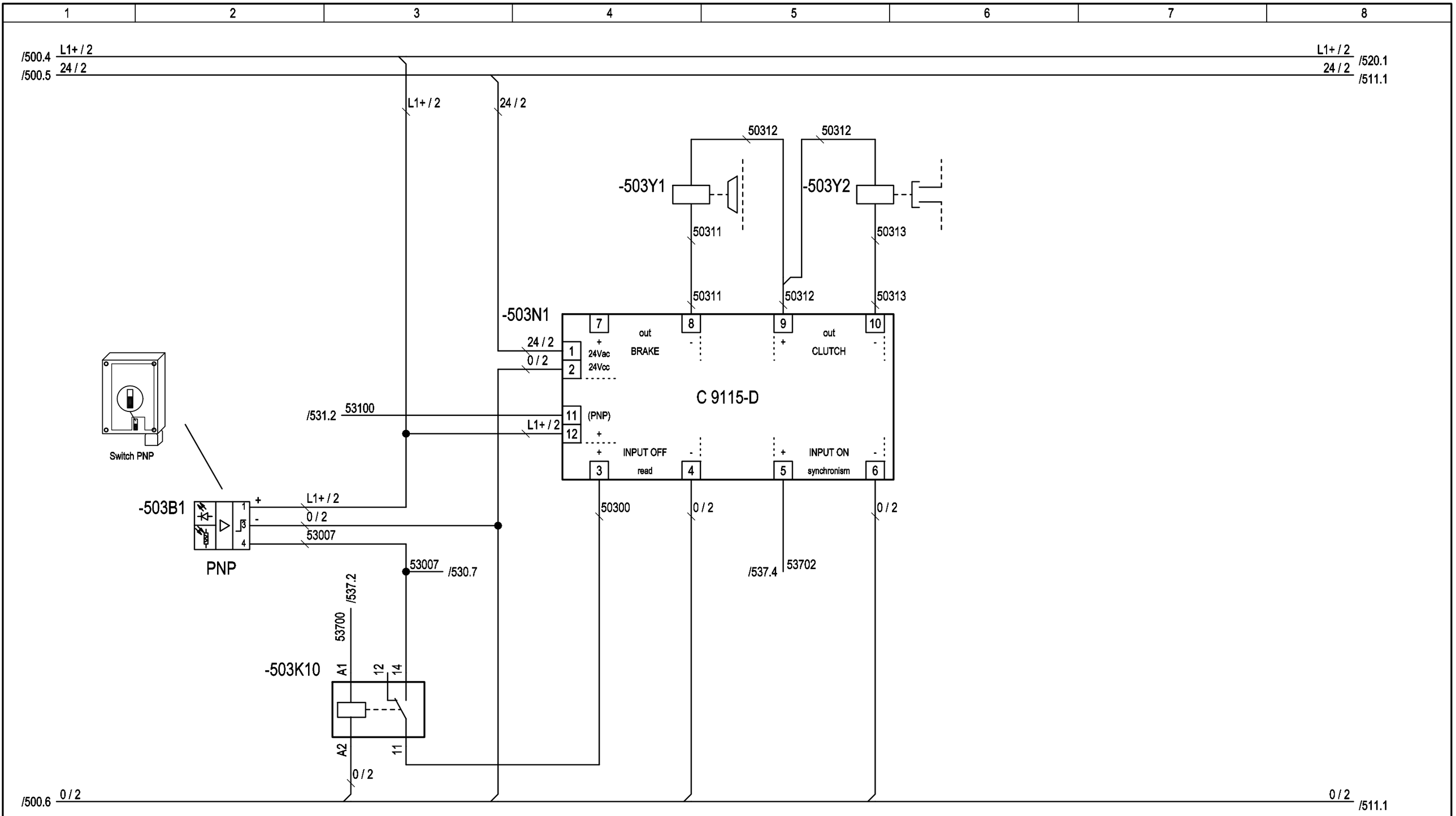

3				Date	\Z72	NURTURE, INC. (USA)	ACMAVOLPAK	TYPE OF MACHINE: SM-360 F4 WD	CLUTCH - BRAKE REEL SPLICE AUTOMATIC	
2				Draw.	A.LLEONART			PROJECT Nº: 24981A		
1	DIN			Print.	22.07.2014					Sheet 503
	Modification	Date	Name	Norm	DIN	Nº ORDER 13.025		\Z69		Next 504

PATH: 24981A/Diagrams/01-Electrical schemes/503

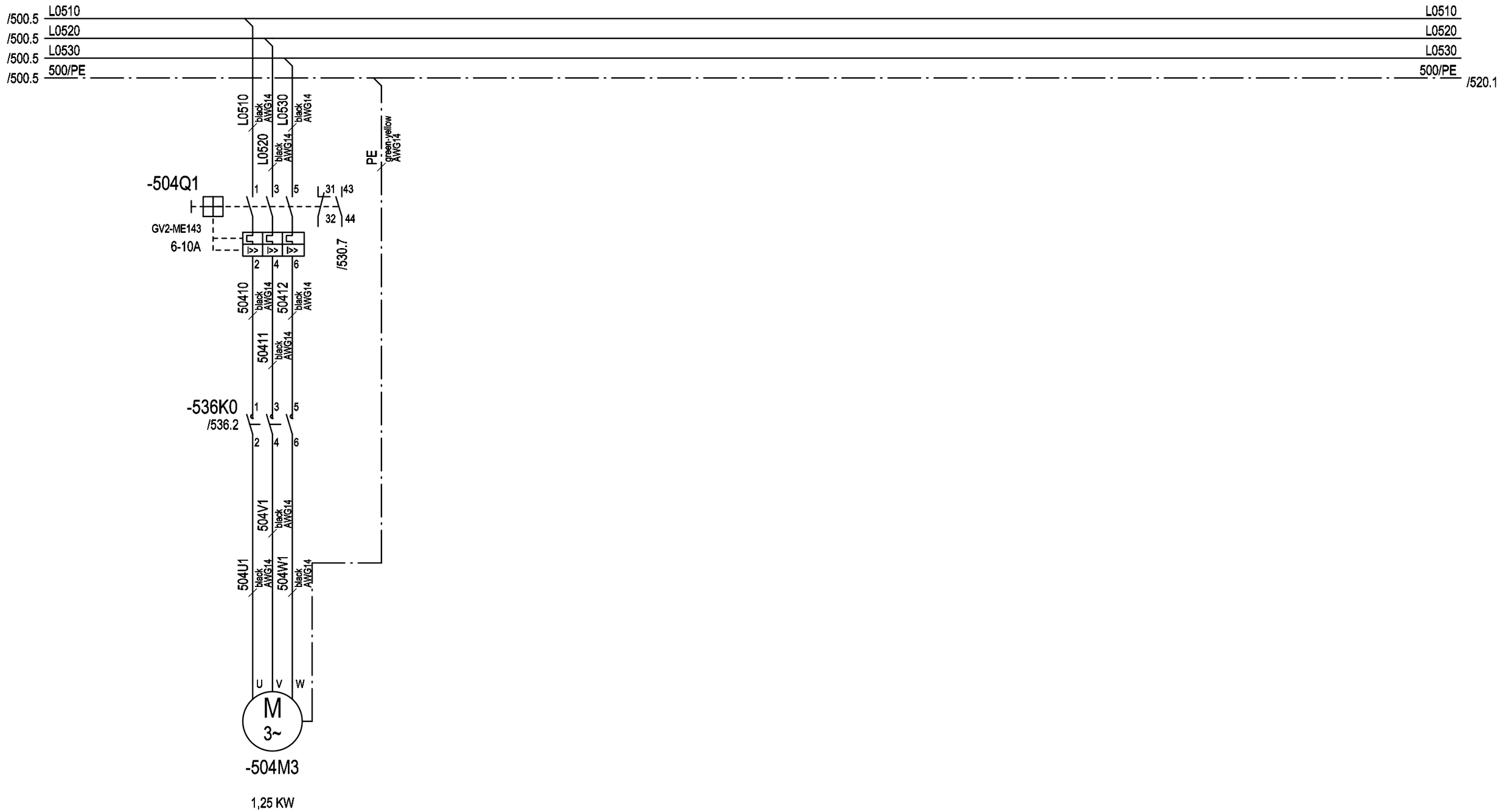

3				Date	\Z72	NURTURE, INC.	ACMAVOLPAK	TYPE OF MACHINE: SM-360 F4 WD	VACUUM PUMP	
2				Draw.	A.LLEONART	(USA)		PROJECT Nº: 24981A	REEL SPLICE	
1	DIN			Print.	22.07.2014				AUTOMATIC	Sheet 504
	Modification	Date	Name	Norm	DIN	Nº ORDER 13.025		\Z69		Next 511

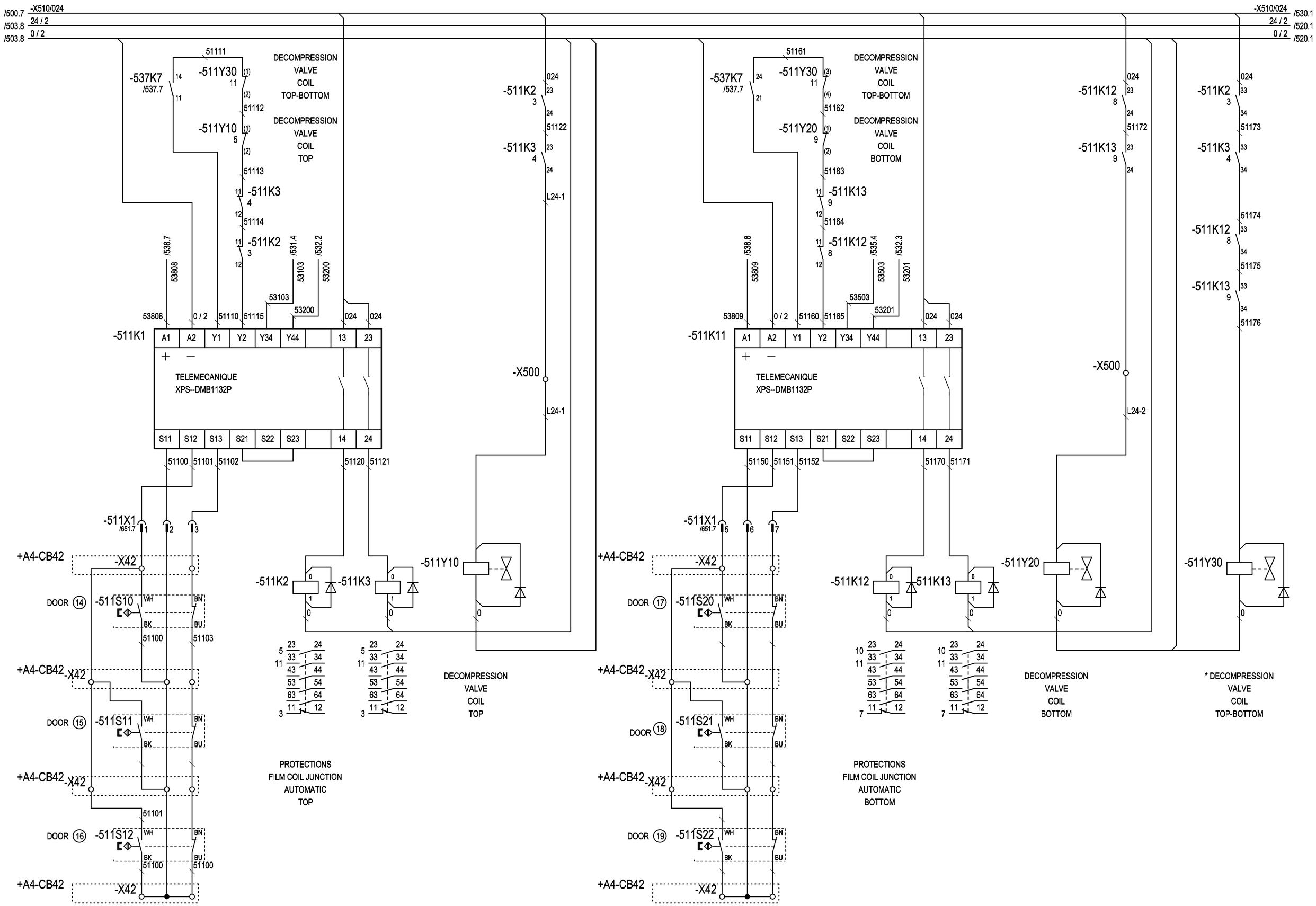

3				Date	22.07.2014	NURTURE, INC. (USA)	ACMAVOLPAK	TYPE OF MACHINE: SM-360 F4 WD	PROTECTIONS REEL SPLICE AUTOMATIC
2				Draw.	A.LLEONART			PROJECT Nº: 24981A	
1				Comp.		Nº ORDER 13.025		DRAWING Nº	Sheet 511
	Modification	Date	Name	Norm	DIN				Next 520

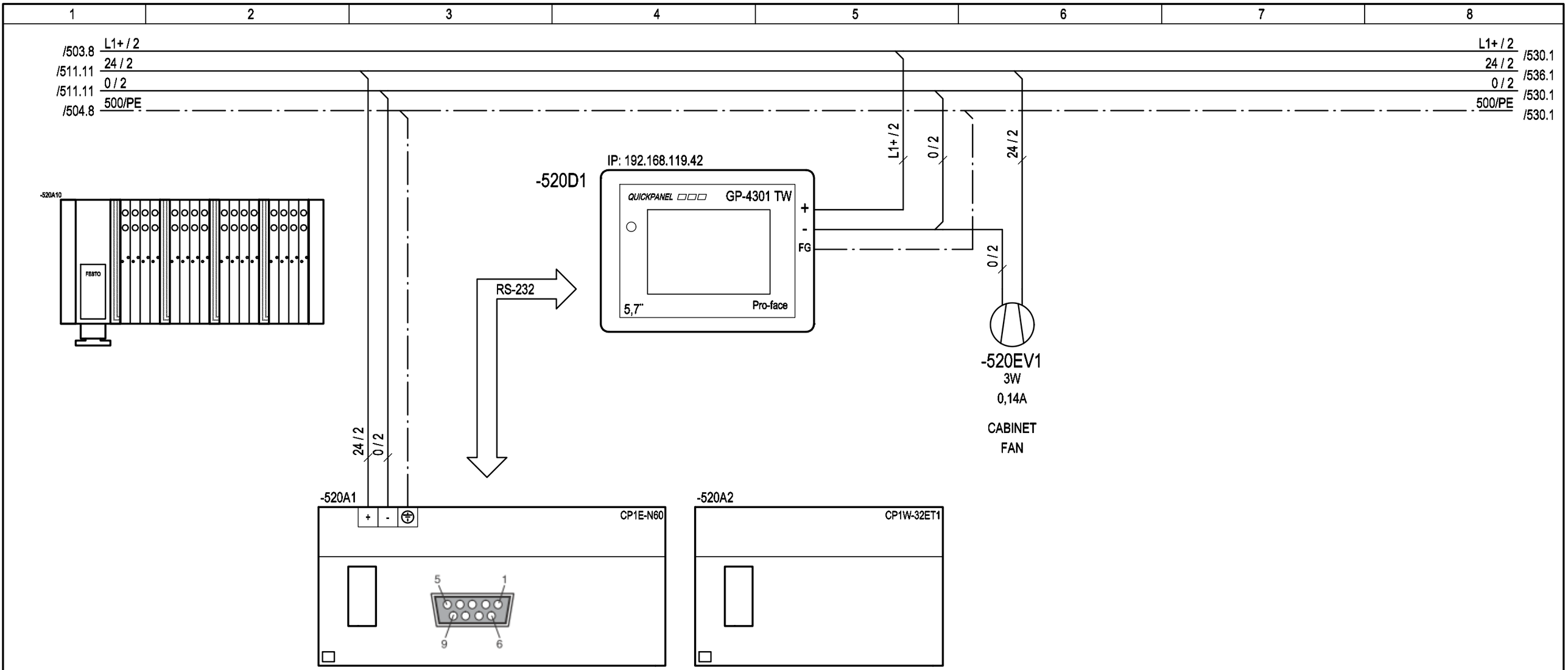

Pin	Abbr.	Signal	Signal direction
1	FG	Frame ground	–
2	SD(TXD)	Send data	Outputs
3	RD(RXD)	Receive data	Inputs
4	RS(RTS)	Request to send	Outputs
5	CS(CTS)	Clear to send	Inputs
6	5V	Power	–
7	DR(DSR)	Data set ready	Inputs
8	ER(DTR)	Data terminal ready	Outputs
9	SG(0V)	Signal ground	–
Connector hood	FG	Frame ground	–

-520X1

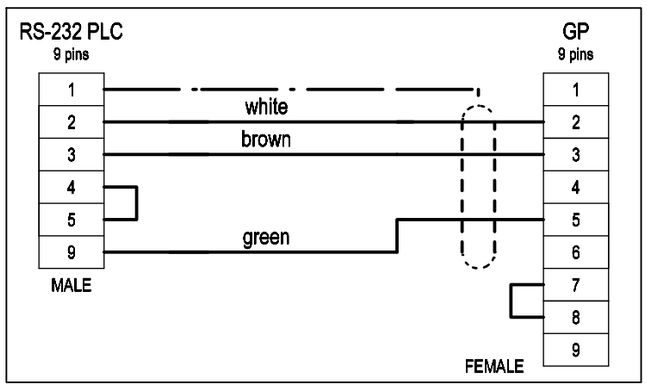

Pin Arrangement	Pin No.	RS-232C		
		Signal Name	Direction	Meaning
5 9 1 6 (GP unit side)	1	CD	Input	Carrier Detect
	2	RD(RXD)	Input	Receive Data
	3	SD(TXD)	Output	Send Data
	4	ER(DTR)	Output	Data Terminal Ready
	5	SG	-	Signal Ground
	6	DR(DSR)	Input	Data Set Ready
	7	RS(RTS)	Output	Request to Send
	8	CS(CTS)	Input	Send Possible
	9	CI(RI)	Input	Called status display
	Shell	FG	-	Frame Ground (Common with SG)

3				Date	\Z72
2				Draw.	A.LLEONART
1	DIN			Print.	22.07.2014
	Modification	Date	Name	Norm	DIN

NURTURE, INC.
(USA)
Nº ORDER 13.025

ACMAVOLPAK

TYPE OF MACHINE: SM-360 F4 WD
PROJECT Nº: 24981A
\Z69

PLC'S DISTRIBUTION
REEL SPLICE
AUTOMATIC

Sheet 520
Next 530

PATH: 24981A/Diagrams/01-Electrical schemes/520

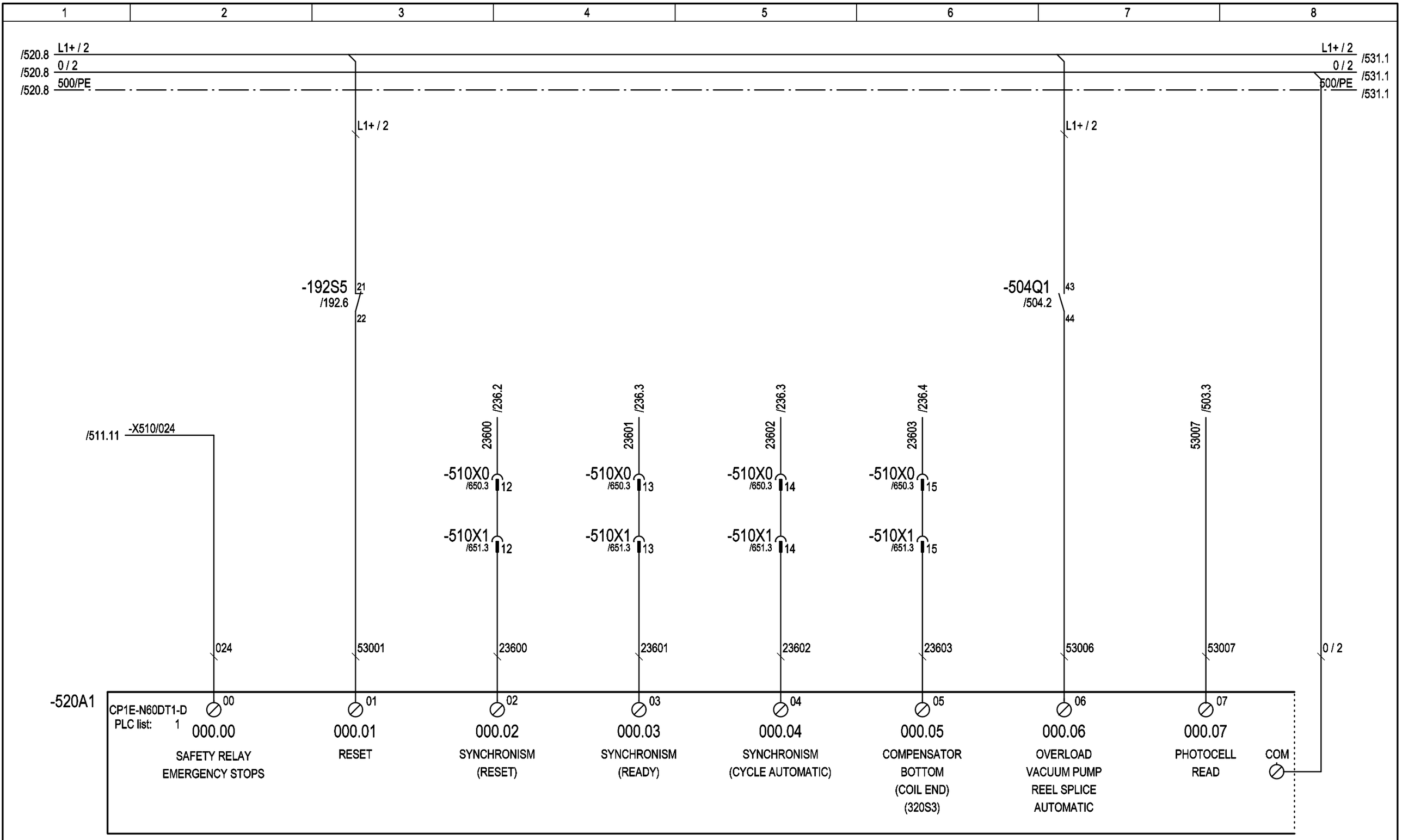

3				Date	\Z72	NURTURE, INC. (USA)	ACMAVOLPAK	TYPE OF MACHINE: SM-360 F4 WD	PLC's INPUTS REEL SPLICE AUTOMATIC	
2				Draw.	A.LLEONART			PROJECT Nº: 24981A		
1	DIN			Print.	22.07.2014					Sheet 530
	Modification	Date	Name	Norm	DIN	Nº ORDER 13.025		\Z69		Next 531

PATH: 24981A/Diagrams/01-Electrical schemes/530

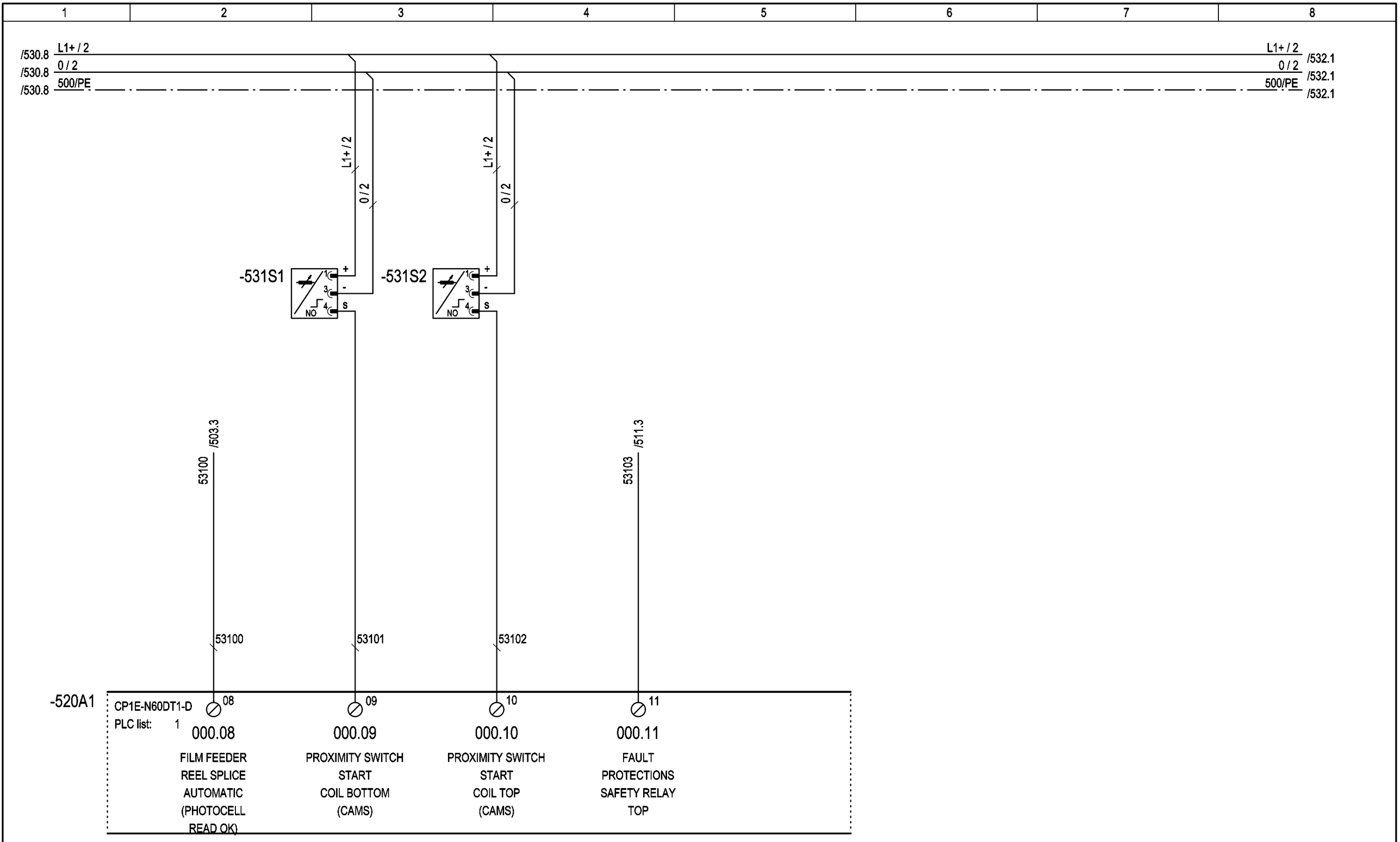

3				Date	\Z72	NURTURE, INC.	ACMAVOLPAK	TYPE OF MACHINE: SM-360 F4 WD	PLC's INPUTS	
2				Draw.	A.LLEONART	(USA)		PROJECT Nº: 24981A	REEL SPLICE	
1	DIN			Print.	22.07.2014				AUTOMATIC	Sheet 531
	Modification	Date	Name	Norm	DIN	Nº ORDER 13.025		\Z69		Next 532

PATH: 24981A/Diagrams/01-Electrical schemes/531

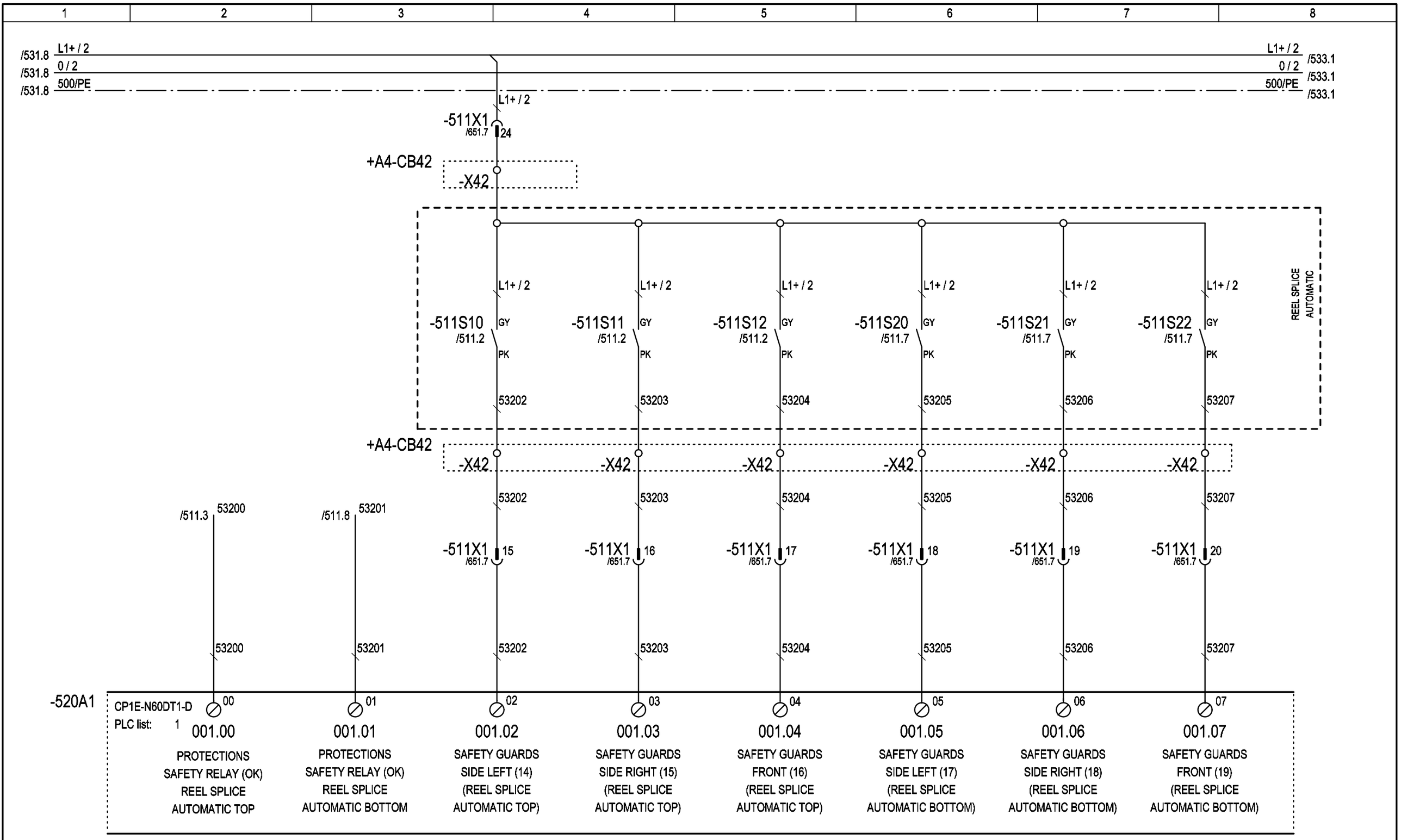

3				Date	\Z72	NURTURE, INC. (USA)	ACMAVOLPAK	TYPE OF MACHINE: SM-360 F4 WD	PLC's INPUTS REEL SPLICE AUTOMATIC	
2				Draw.	A.LLEONART			PROJECT Nº: 24981A		
1	DIN			Print.	22.07.2014					Sheet 532
	Modification	Date	Name	Norm	DIN	Nº ORDER 13.025		\Z69		Next 533

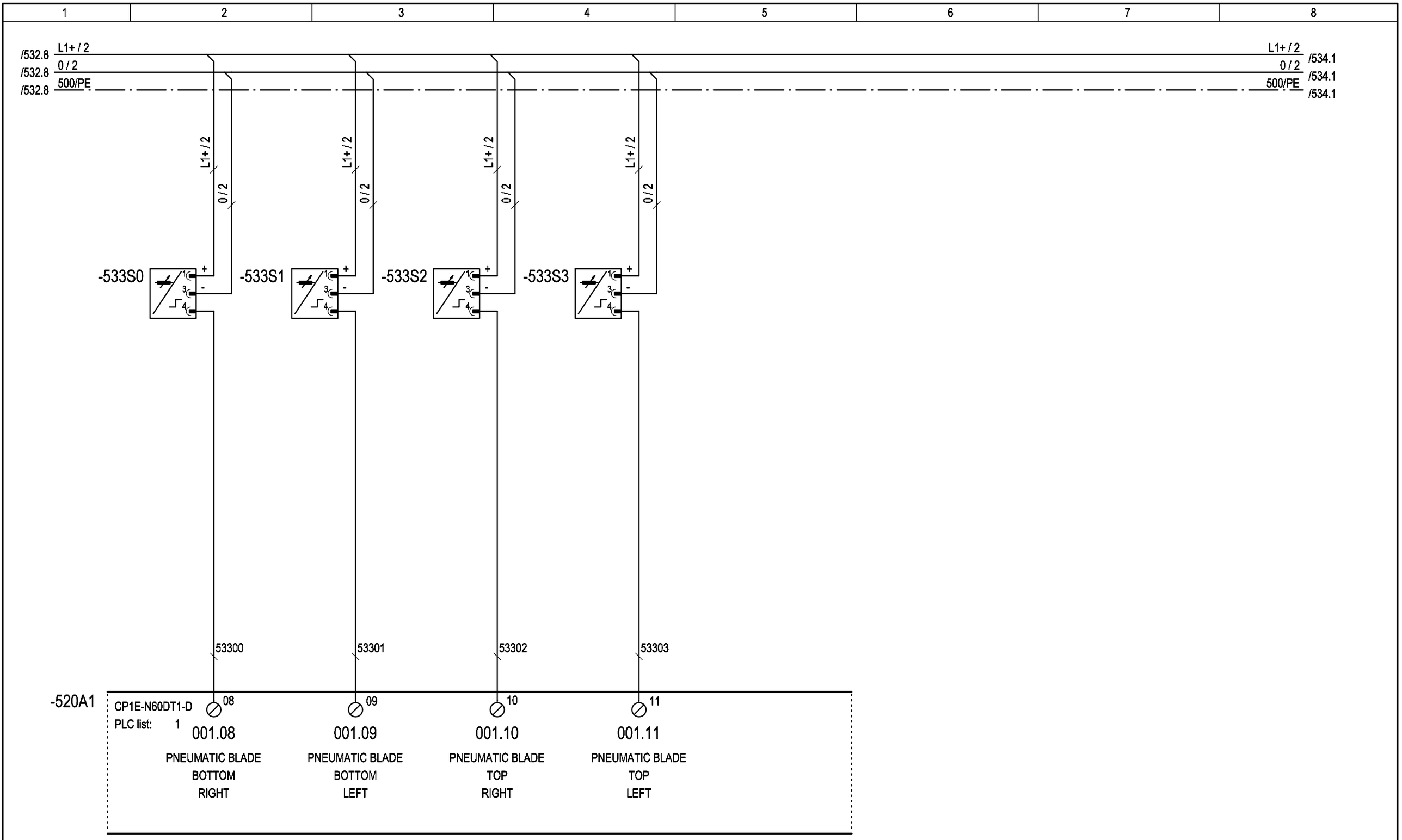

3				Date	\Z72	NURTURE, INC. (USA)	ACMAVOLPAK	TYPE OF MACHINE: SM-360 F4 WD	PLC's INPUTS REEL SPLICE AUTOMATIC	
2				Draw.	A.LLEONART			PROJECT Nº: 24981A		
1	DIN			Print.	22.07.2014					Sheet 533
	Modification	Date	Name	Norm	DIN	Nº ORDER 13.025		\Z69		Next 534

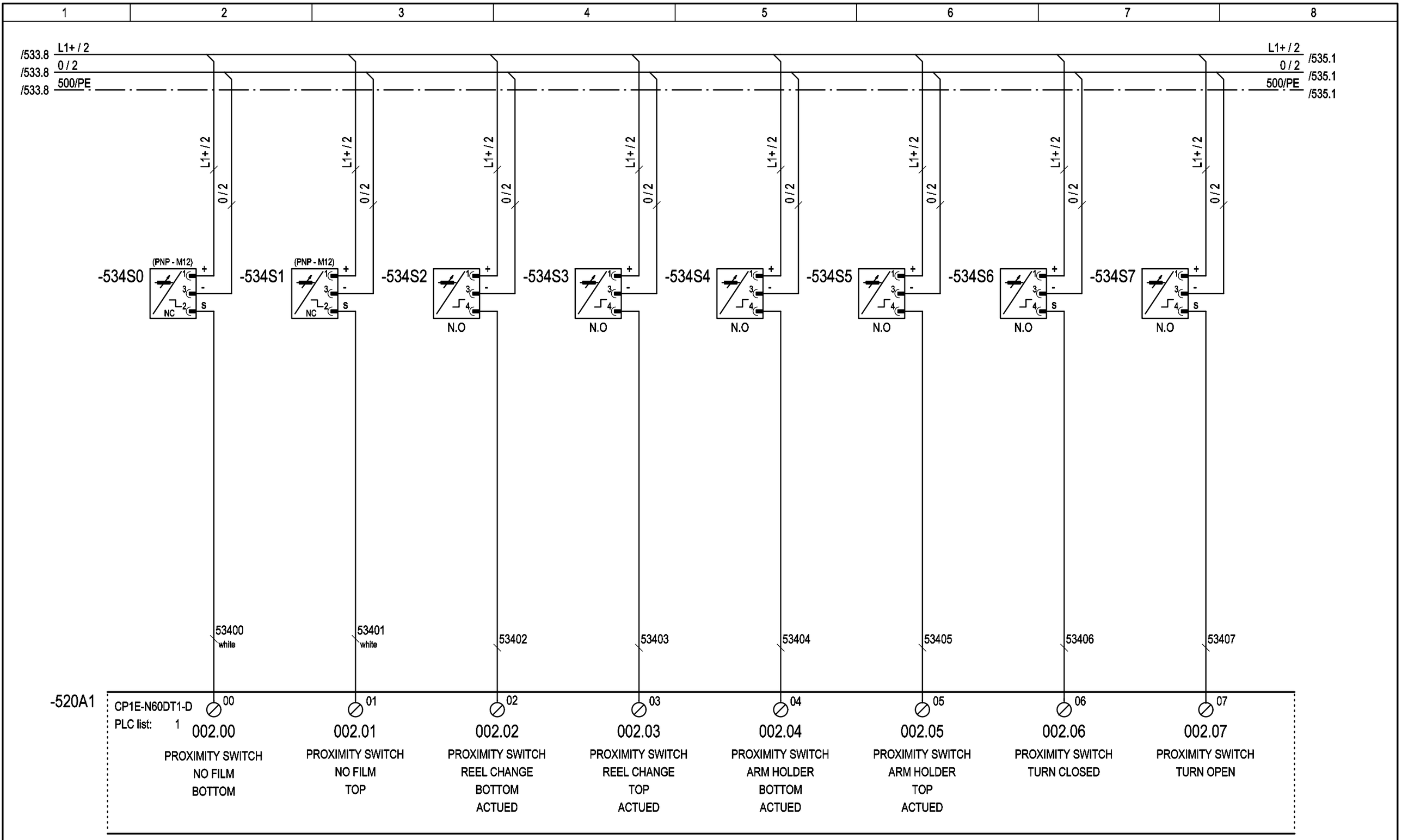

3				Date	\Z72
2				Draw.	A.LLEONART
1	DIN			Print.	22.07.2014
	Modification	Date	Name	Norm	DIN

NURTURE, INC.
(USA)
Nº ORDER 13.025

ACMAVOLPAK

TYPE OF MACHINE: SM-360 F4 WD
PROJECT Nº: 24981A
\Z69

PLC's INPUTS
REEL SPLICE
AUTOMATIC

Sheet 534
Next 535

PATH: 24981A/Diagrams/01-Electrical schemes/534

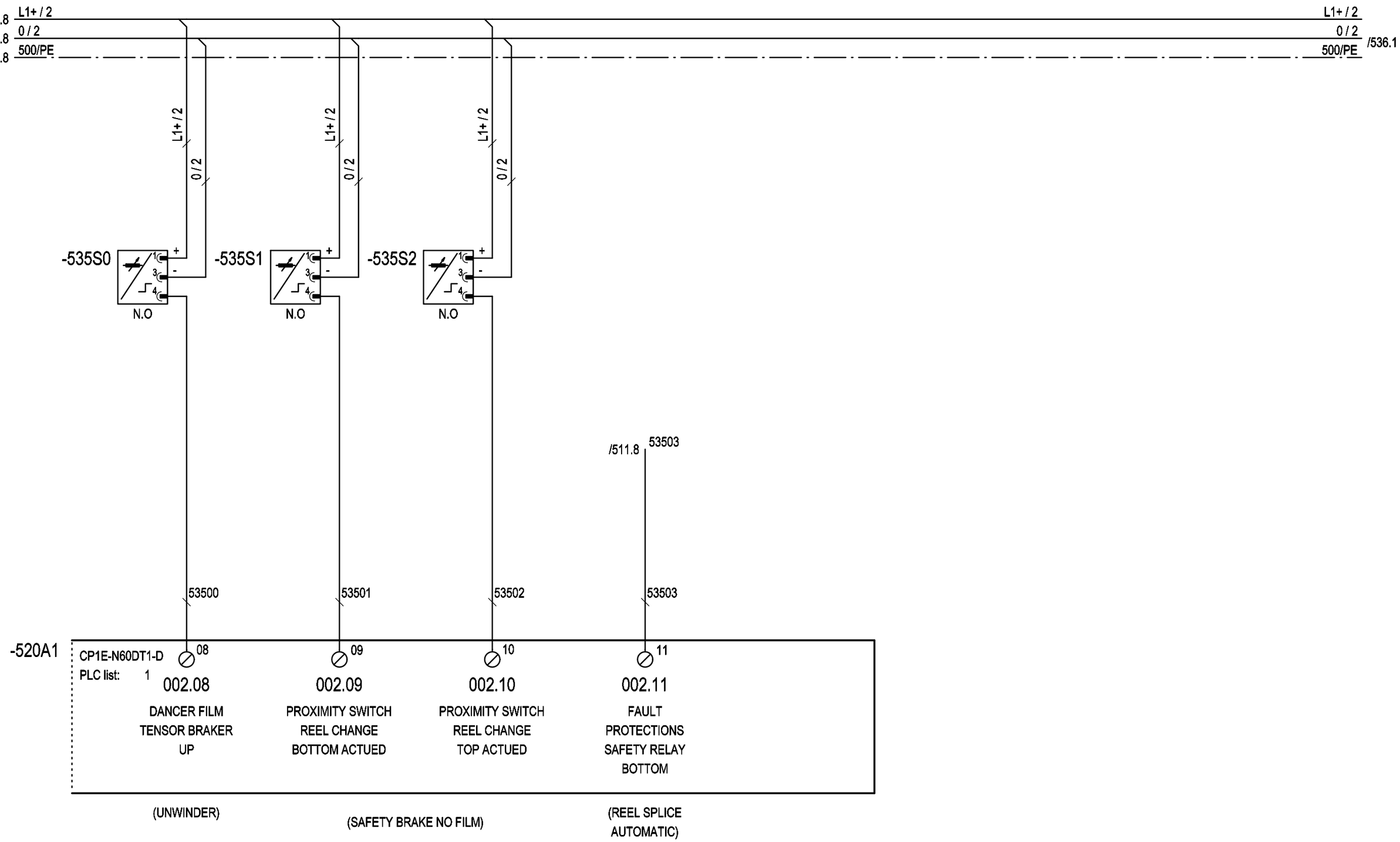

3				Date	\Z72	NURTURE, INC. (USA)	ACMAVOLPAK	TYPE OF MACHINE: SM-360 F4 WD	PLC's INPUTS REEL SPLICE AUTOMATIC	
2				Draw.	A.LLEONART			PROJECT Nº: 24981A		
1	DIN			Print.	22.07.2014					Sheet 535
	Modification	Date	Name	Norm	DIN	Nº ORDER 13.025		\Z69		Next 536

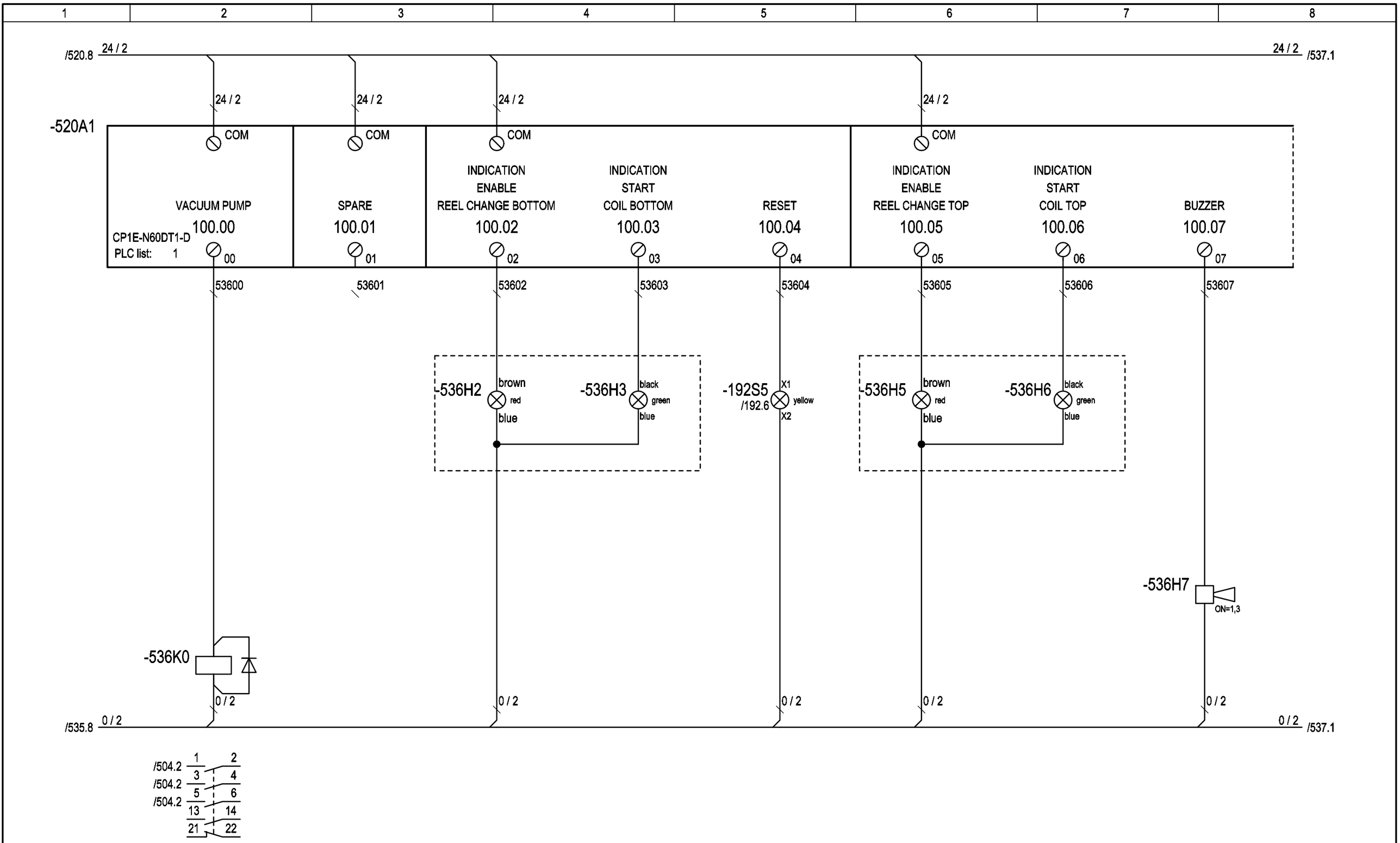

3				Date	\Z72	NURTURE, INC. (USA)	ACMAVOLPAK	TYPE OF MACHINE: SM-360 F4 WD	PLC's OUTPUTS REEL SPLICE AUTOMATIC	
2				Draw.	A.LLEONART			PROJECT Nº: 24981A		
1	DIN			Print.	22.07.2014					Sheet 536
	Modification	Date	Name	Norm	DIN	Nº ORDER 13.025		\Z69		Next 537

PATH: 24981A/Diagrams/01-Electrical schemes/536

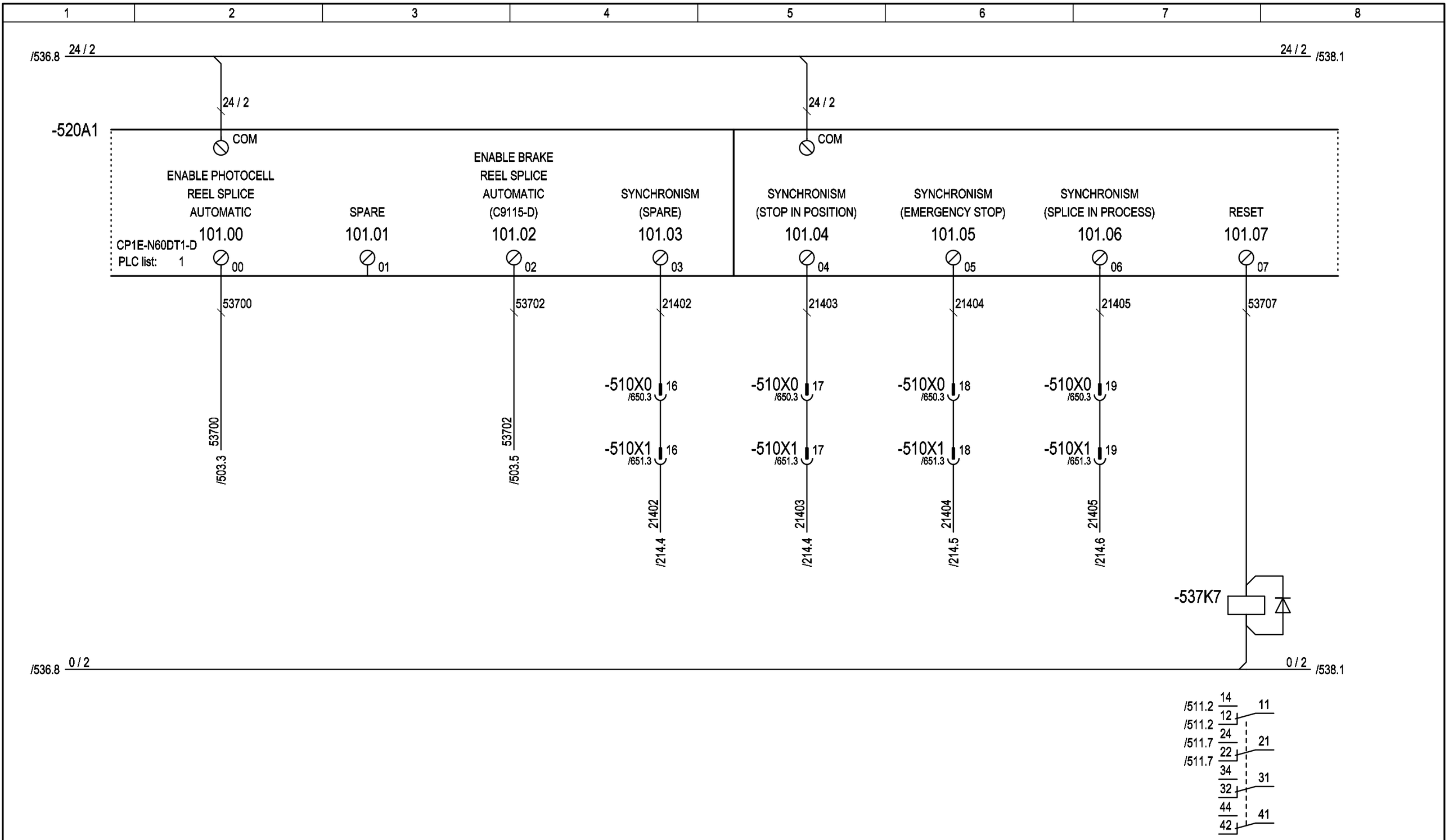

3				Date	\Z72	NURTURE, INC. (USA)	ACMAVOLPAK	TYPE OF MACHINE: SM-360 F4 WD	PLC's OUTPUTS REEL SPLICE AUTOMATIC
2				Draw.	A.LLEONART			PROJECT Nº: 24981A	
1	DIN			Print.	22.07.2014				Sheet 537
	Modification	Date	Name	Norm	DIN	Nº ORDER 13.025		\Z69	Next 538

PATH: 24981A/Diagrams/01-Electrical schemes/537

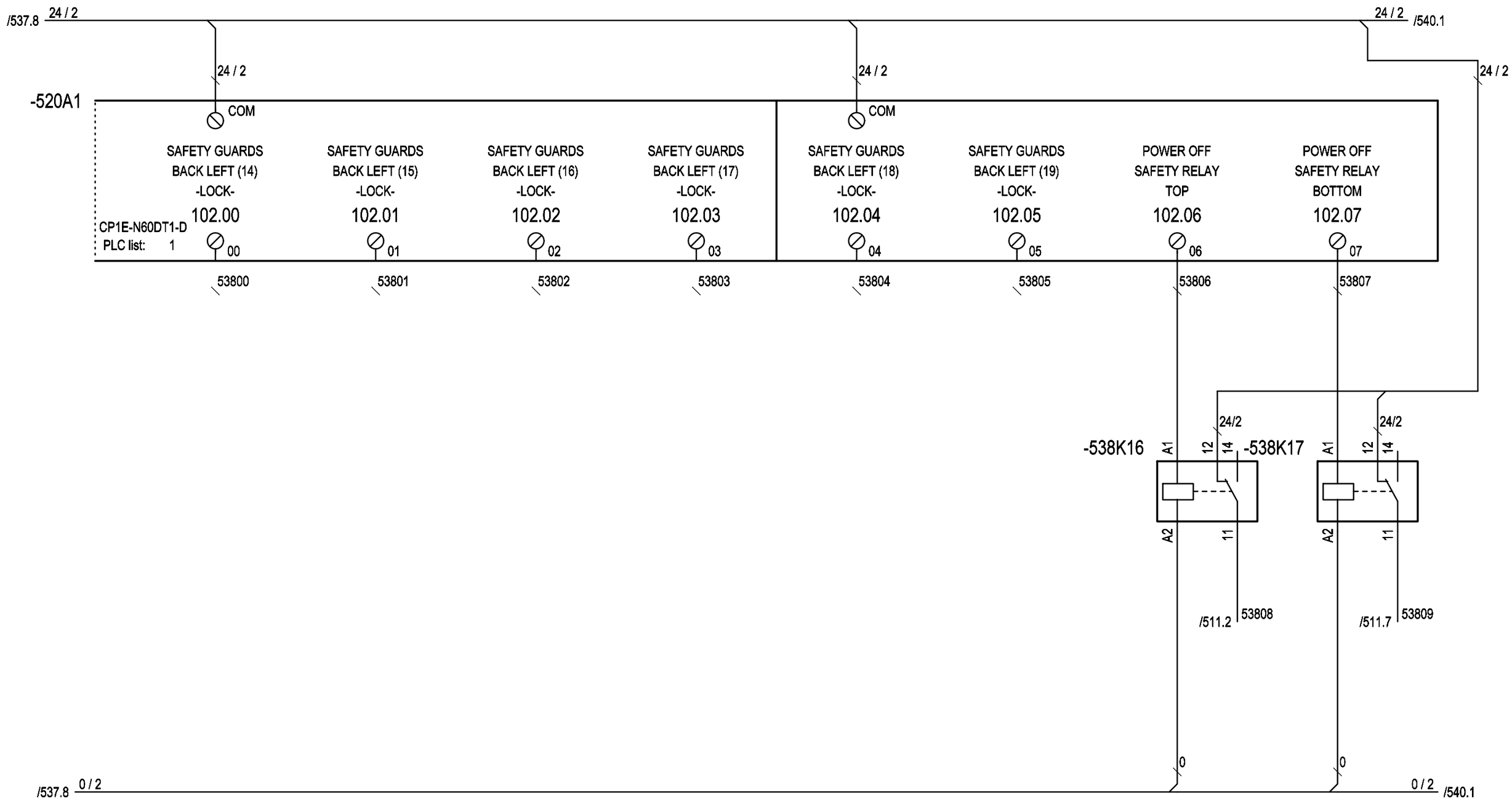

3				Date	\Z72	NURTURE, INC. (USA)	ACMAVOLPAK	TYPE OF MACHINE: SM-360 F4 WD	PLC's OUTPUTS REEL SPLICE AUTOMATIC	
2				Draw.	A.LLEONART			PROJECT Nº: 24981A		
1	DIN			Print.	22.07.2014					Sheet 538
	Modification	Date	Name	Norm	DIN	Nº ORDER 13.025		\Z69		Next 540

PATH: 24981A/Diagrams/01-Electrical schemes/538

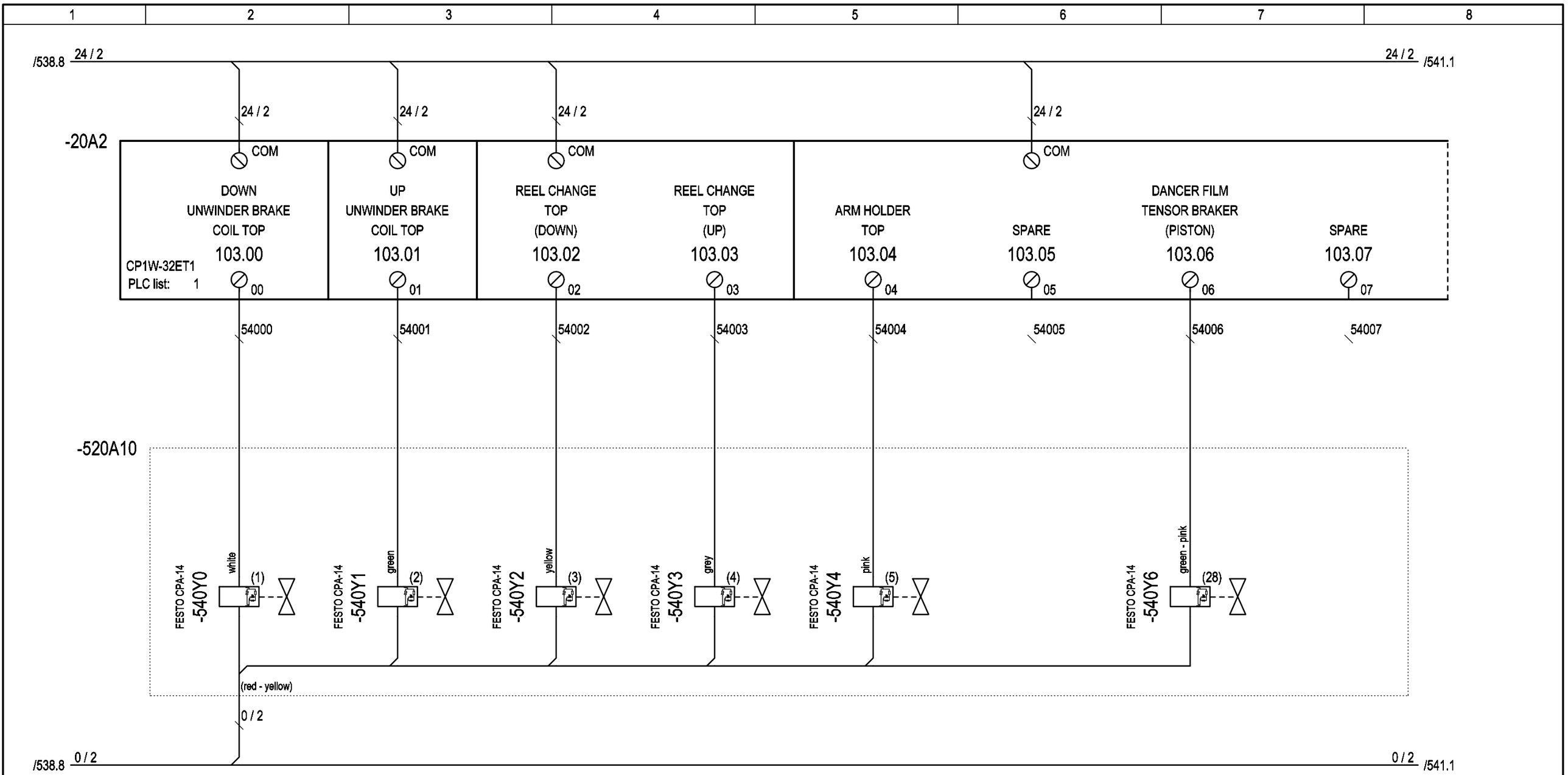

3				Date	\Z72	NURTURE, INC.	ACMAVOLPAK	TYPE OF MACHINE: SM-360 F4 WD	PLC's OUTPUTS	
2				Draw.	A.LLEONART	(USA)		PROJECT Nº: 24981A	REEL SPLICE	
1	DIN			Print.	22.07.2014					Sheet 540
	Modification	Date	Name	Norm	DIN	Nº ORDER 13.025		\Z69	AUTOMATIC	Next 541

PATH: 24981A/Diagrams/01-Electrical schemes/540

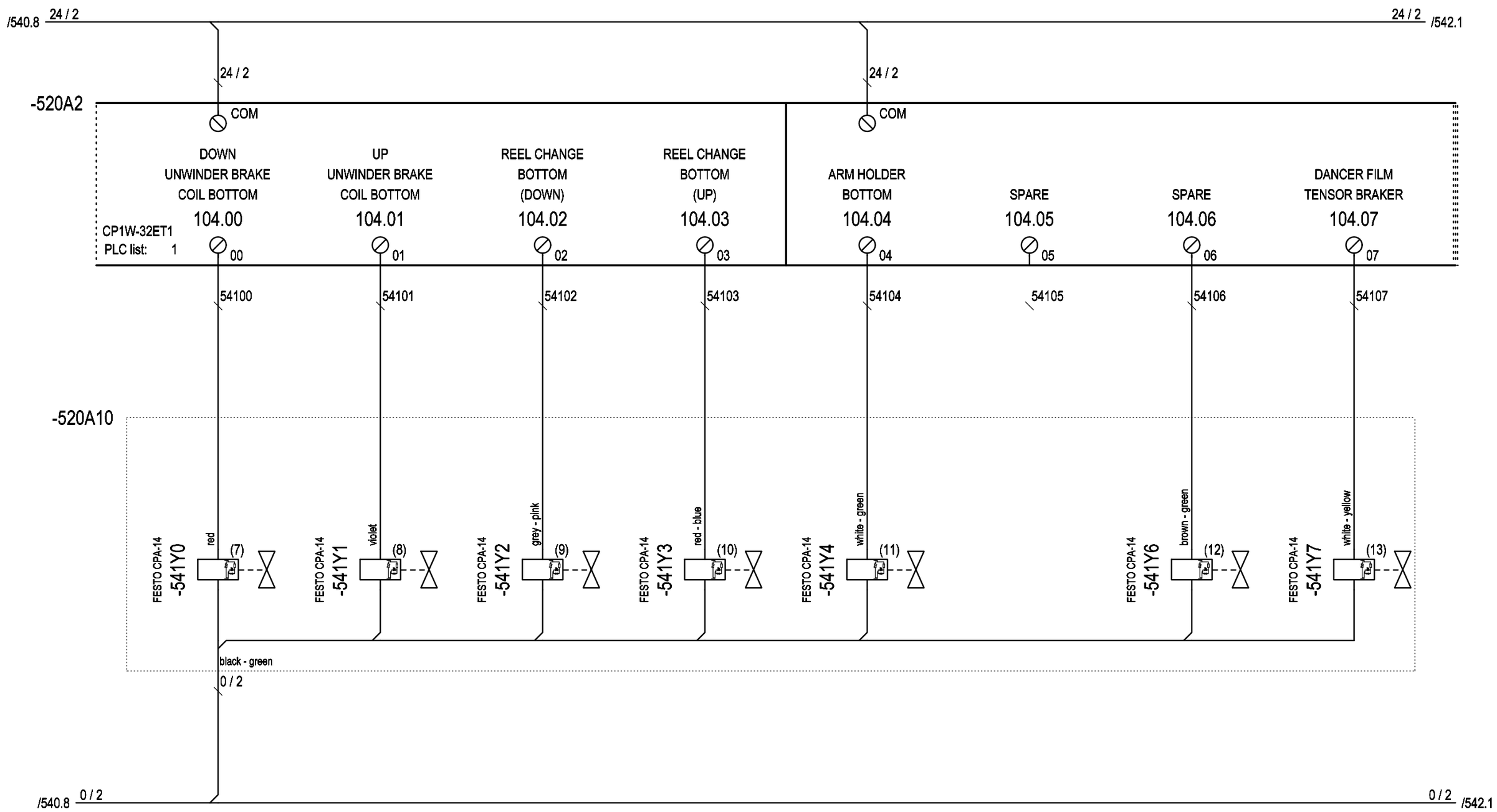

3				Date	\Z72	NURTURE, INC.	ACMAVOLPAK	TYPE OF MACHINE: SM-360 F4 WD	PLC's OUTPUTS	
2				Draw.	A.LLEONART	(USA)		PROJECT Nº: 24981A	REEL SPLICE	
1	DIN			Print.	22.07.2014				AUTOMATIC	Sheet 541
	Modification	Date	Name	Norm	DIN	Nº ORDER 13.025		\Z69		Next 542

PATH: 24981A/Diagrams/01-Electrical schemes/541

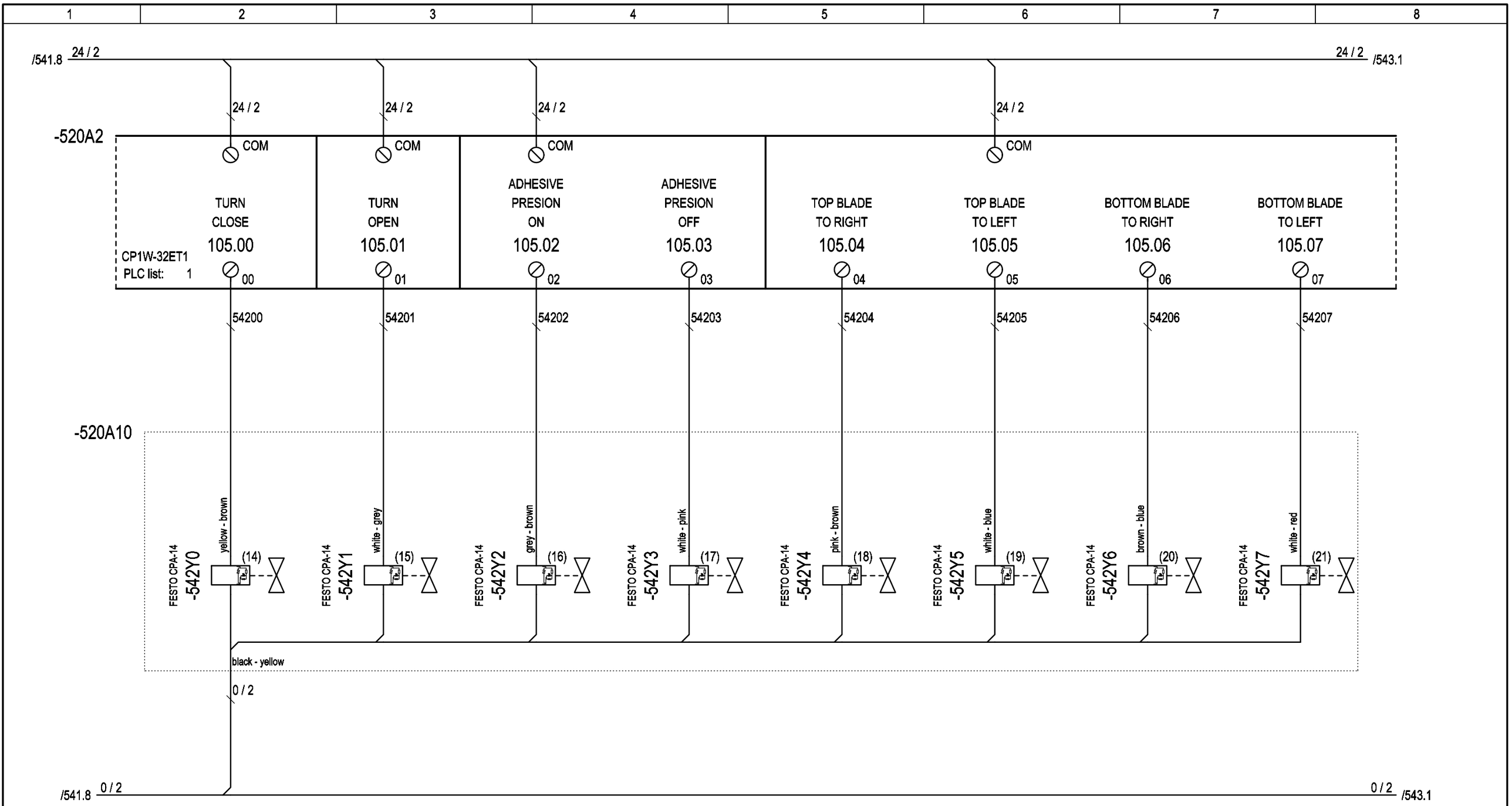

3				Date	\Z72	NURTURE, INC.	ACMAVOLPAK	TYPE OF MACHINE: SM-360 F4 WD	PLC's OUTPUTS	
2				Draw.	A.LLEONART	(USA)		PROJECT Nº: 24981A	REEL SPLICE	
1	DIN			Print.	22.07.2014				AUTOMATIC	Sheet 542
	Modification	Date	Name	Norm	DIN	Nº ORDER 13.025		\Z69		Next 543

PATH: 24981A/Diagrams/01-Electrical schemes/542

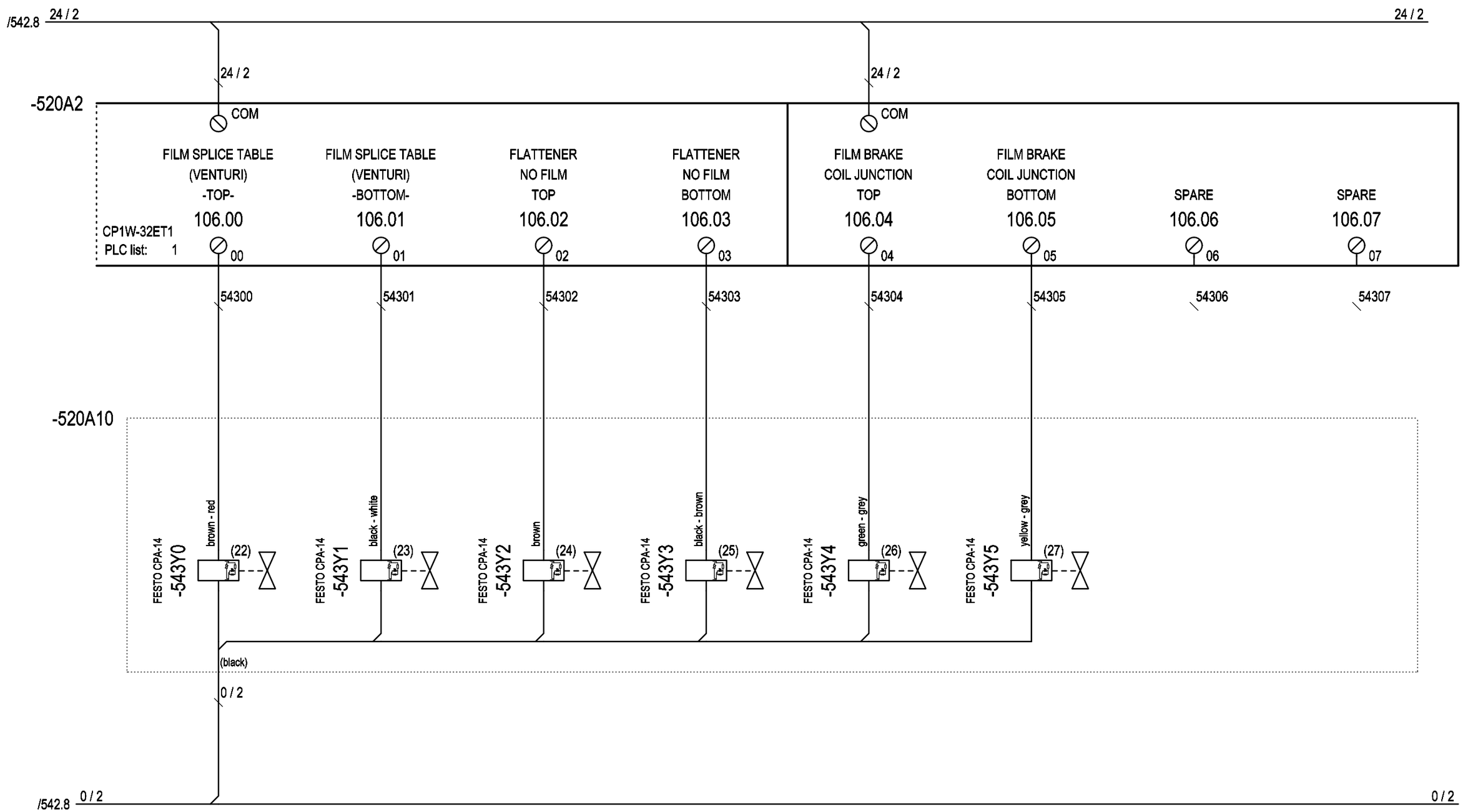

3				Date	\Z72	NURTURE, INC. (USA)	ACMAVOLPAK	TYPE OF MACHINE: SM-360 F4 WD	PLC's OUTPUTS REEL SPLICE AUTOMATIC	
2				Draw.	A.LLEONART			PROJECT Nº: 24981A		
1	DIN			Print.	22.07.2014					Sheet 543
	Modification	Date	Name	Norm	DIN	Nº ORDER 13.025		\Z69		Next

PATH: 24981A/Diagrams/01-Electrical schemes/543

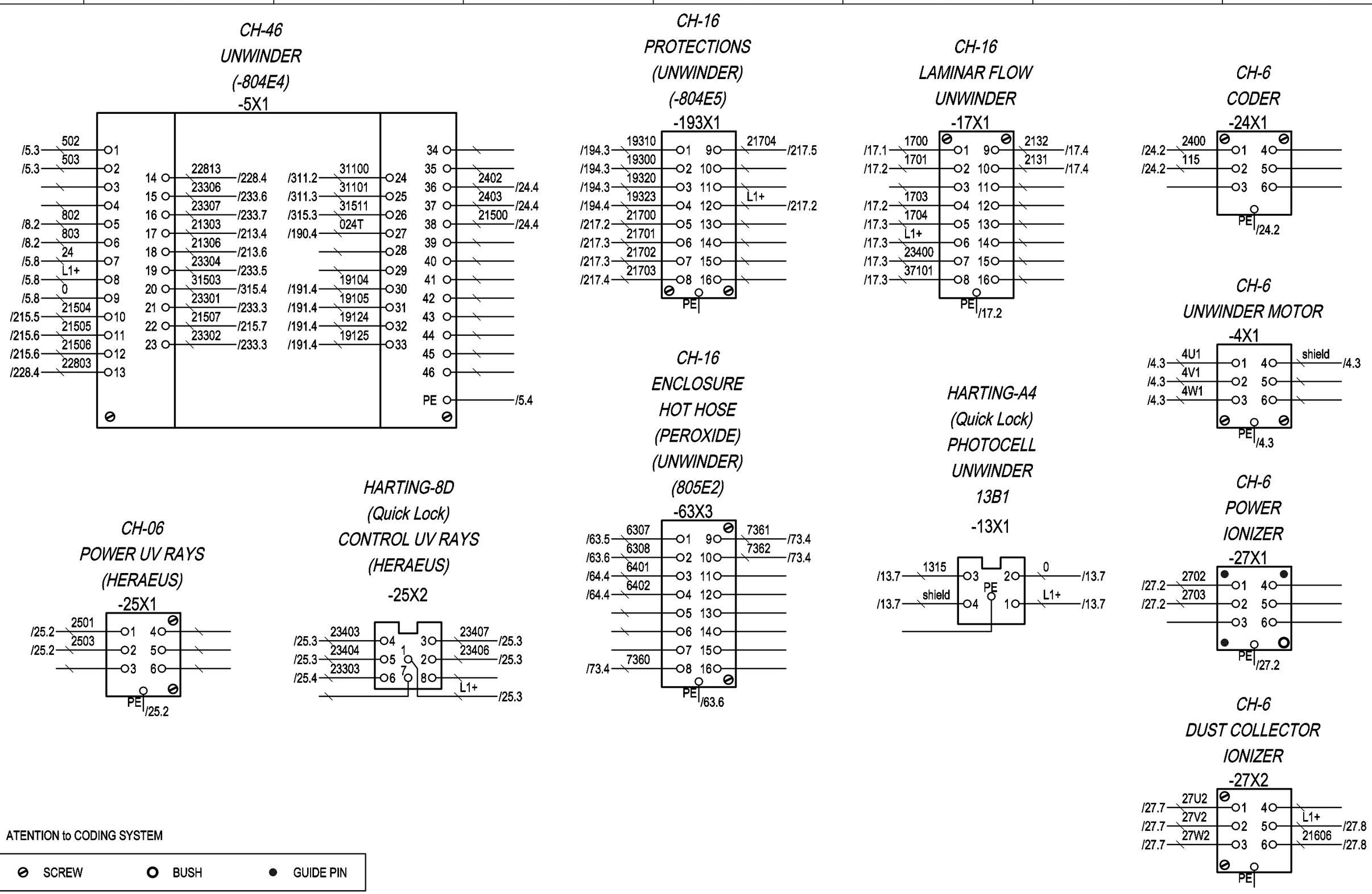

3				Date	\Z72	NURTURE, INC. (USA)	ACMAVOLPAK	TYPE OF MACHINE: SM-360 F4 WD	CONNECTORS MAIN CABINET / UNWINDER	=
2				Draw.	A.LLEONART			PROJECT Nº: 24981A		+
1	DIN			Print.	22.07.2014					Sheet 600
	Modification	Date	Name	Norm	DIN	Nº ORDER 13.025		\Z69		Next 601

PATH: 24981A/Diagrams/02-Connectors/600

1	2	3	4	5	6	7	8

CH-24
HEATING
HEATERS (BOTTOM-VERTICAL SEALING)
-70X10

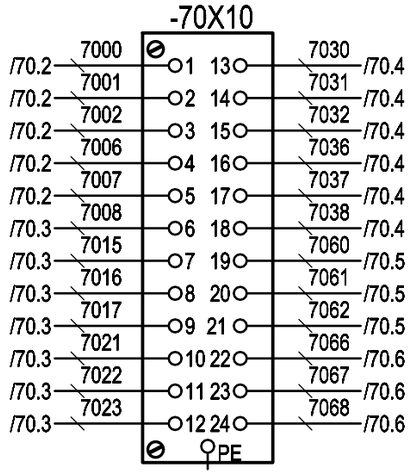

CH-24
HEATING
HEATERS (TOP SEALING)
-70X11

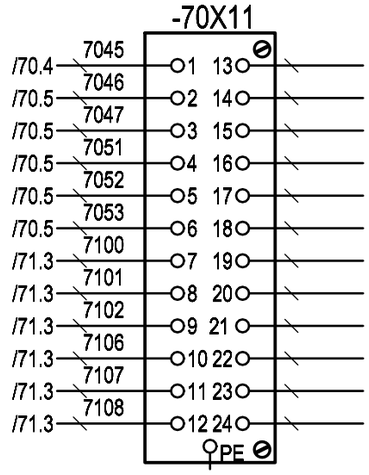

CH-24
HEATING
HEATERS (BOTTOM-VERTICAL SEALING)
-70X20

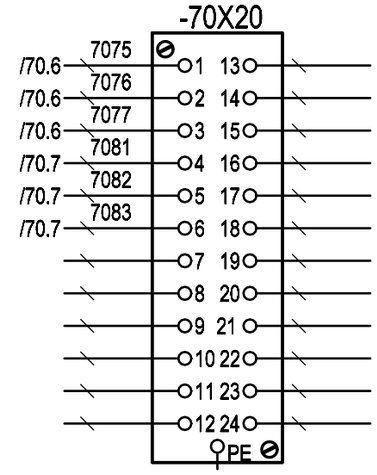

CH-24
HEATING
HEATERS (CAP SEALING)
-72X10

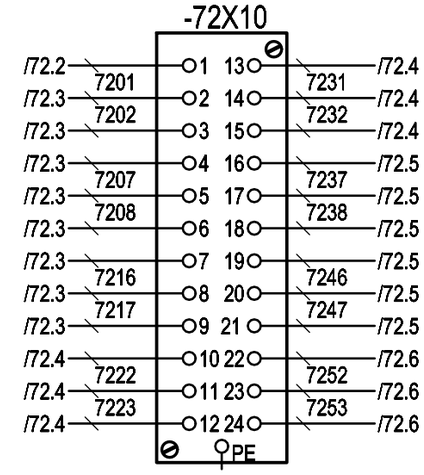

CH-24
HEATING
HEATERS (BOTTOM-VERTICAL SEALING)
-40X10

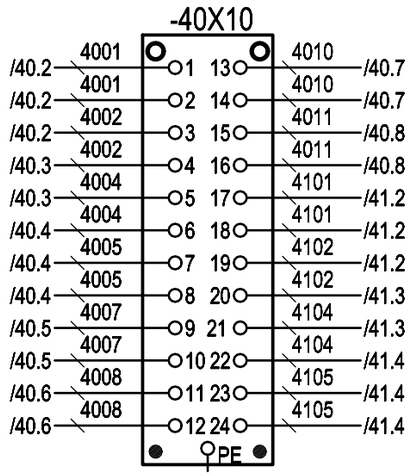

CH-24
HEATING
HEATERS (TOP SEALING)-(CAPS)
-41X10

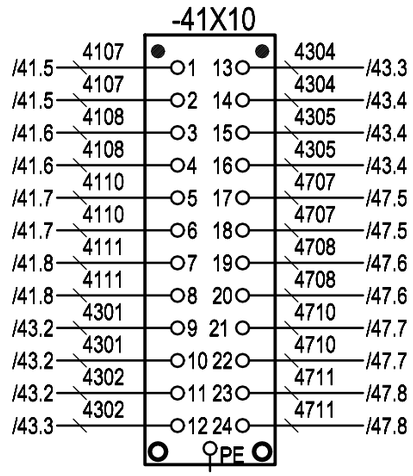

CH-24
HEATING
HEATERS (BOTTOM-VERTICAL SEALING)
-42X10

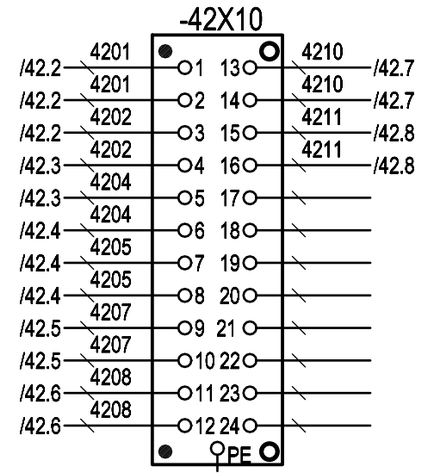

CH-24
HEATING
HEATERS (CAP SEALING)
-46X10

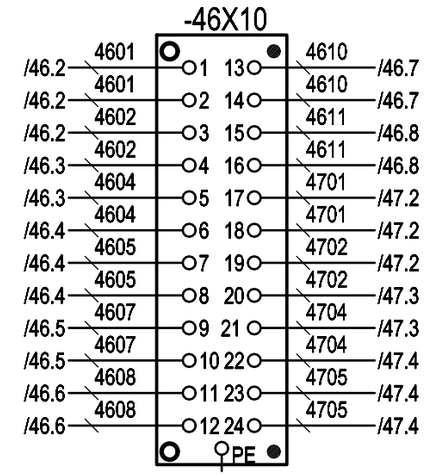

ATENTION to CODING SYSTEM

⊘ SCREW	O BUSH	● GUIDE PIN

3				Date	\Z72	NURTURE, INC. (USA)	ACMAVOLPAK	TYPE OF MACHINE: SM-360 F4 WD	CONNECTORS MAIN CABINET / HEATING	=
2				Draw.	A.LLEONART			PROJECT Nº: 24981A		+
1	DIN			Print.	22.07.2014					Sheet 601
	Modification	Date	Name	Norm	DIN	Nº ORDER 13.025		\Z69		Next 602

1	2	3	4	5	6	7	8

CH-46
ENCLOSURE
SEALING MODULE (-804E6)
-6X1

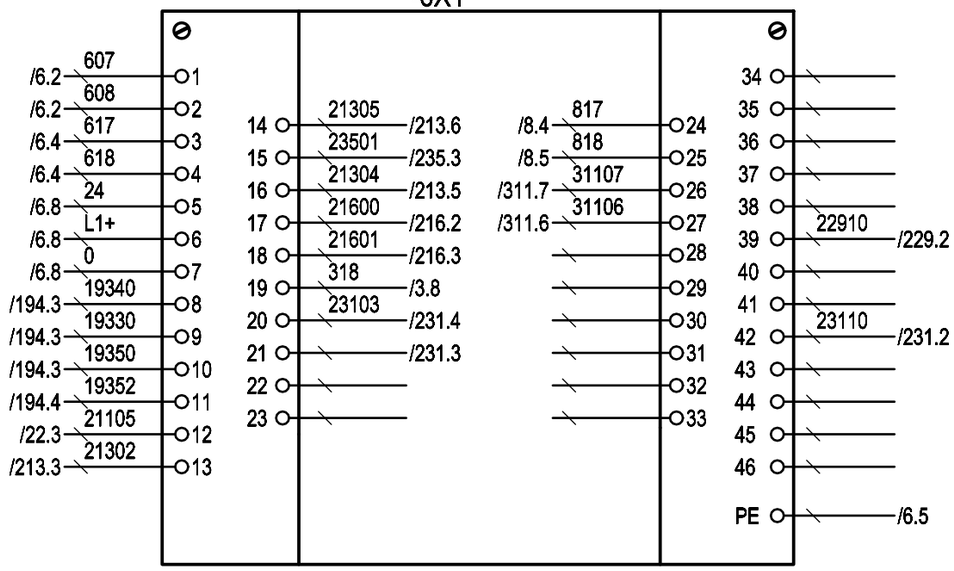

CH-46
ENCLOSURE FILLING
MODULE (-804E7)
-193X2

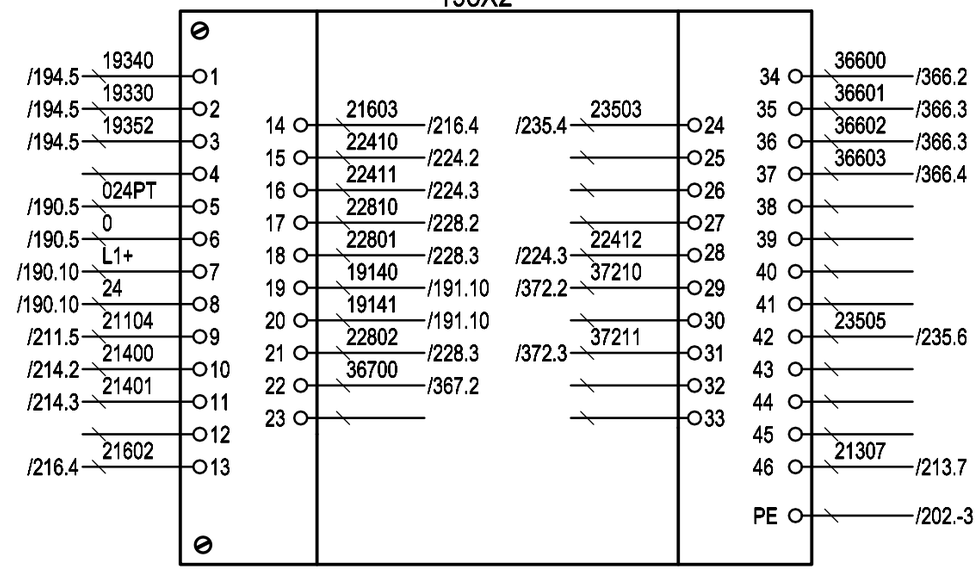

CH-24
SEALING PUSH-BUTTON 1
-190X4

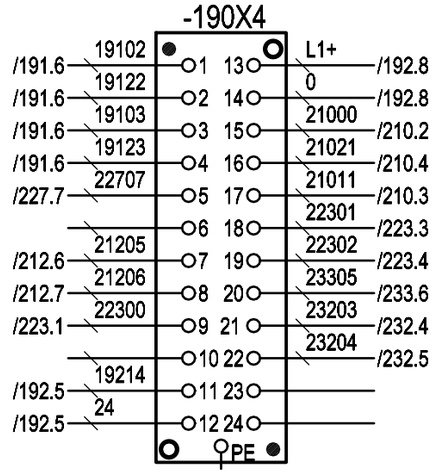

CH-24
SEALING PUSH-BUTTON 2
-190X2

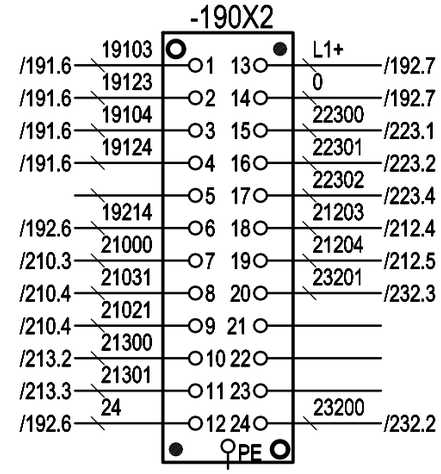

ATENTION to CODING SYSTEM

⊘ SCREW	O BUSH	● GUIDE PIN

3				Date	\Z72	NURTURE, INC. (USA)	ACMAVOLPAK	TYPE OF MACHINE: SM-360 F4 WD	CONNECTORS MAIN CABINET / MACHINE	=	
2				Draw.	A.LLEONART			PROJECT Nº: 24981A		+	
1	DIN			Print.	22.07.2014					Sheet 602	
	Modification	Date	Name	Norm	DIN	Nº ORDER 13.025		\Z69		Next 603	

1	2	3	4	5	6	7	8

MURRPLASTIK
KDL 24/5
MAIN CABINET
/ MACHINE
-603X1

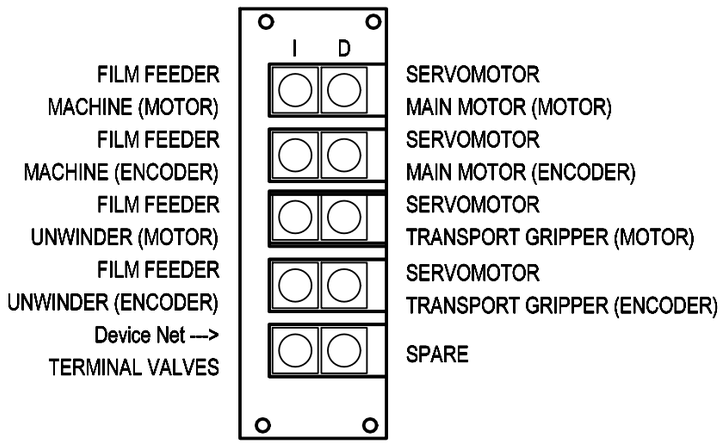

CH-6
POWER
AUTOMATIC
LUBRICATION
-22X1

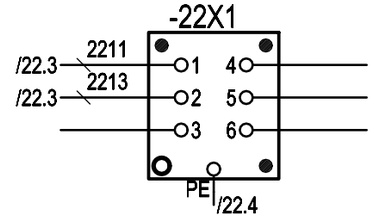

CH-16
OUTLET LINE INTERFACE
-196X0

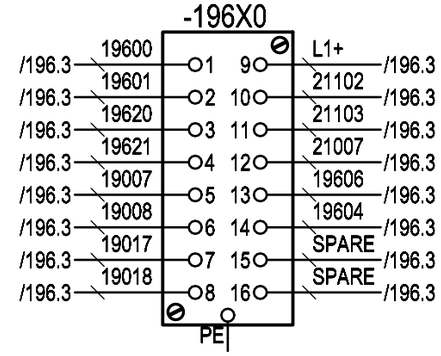

CH-16
LAMINAR FLOW
SEALING MODULE
FILLING MODULE
-17X2

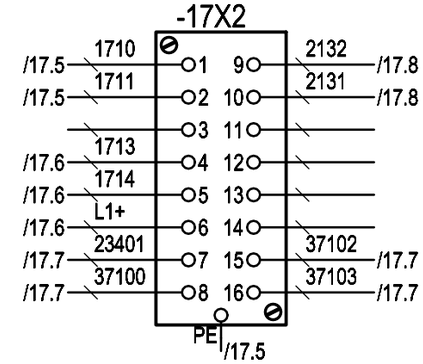

CH-6
RETAL EXTRACTION
-9X1

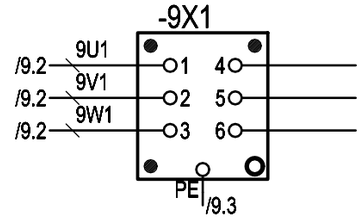

MURRPLASTIK
KDL 24/5
MAIN CABINET
/ MACHINE
-603X2

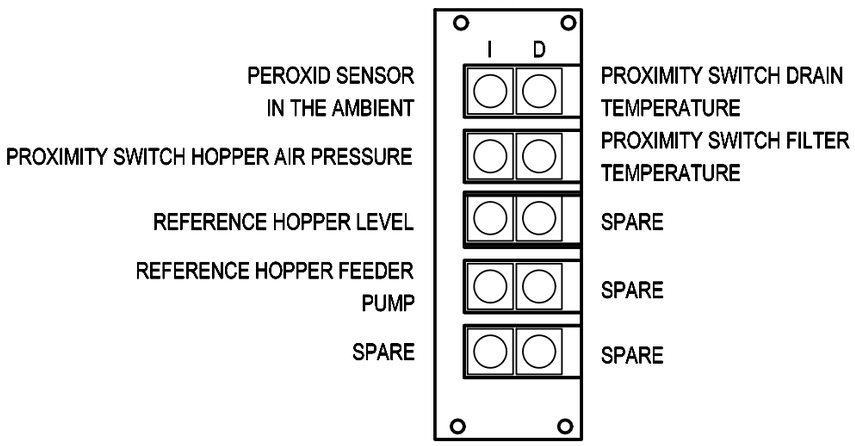

CH-16
CONTROL STREAM
INJECTOR
(805E4)
-237X1

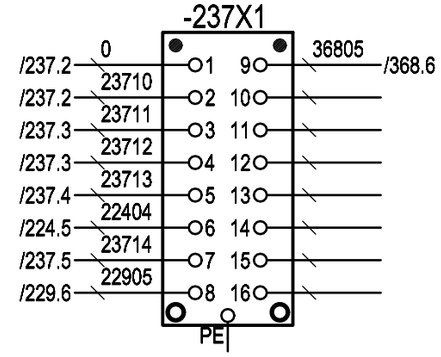

ATENTION to CODING SYSTEM

⊘ SCREW	O BUSH	● GUIDE PIN

3				Date	\Z72	NURTURE, INC. (USA)	ACMAVOLPAK	TYPE OF MACHINE: SM-360 F4 WD	CONNECTORS MAIN CABINET / MACHINE	=
2				Draw.	A.LLEONART			PROJECT Nº: 24981A		+
1	DIN			Print.	22.07.2014					Sheet 603
	Modification	Date	Name	Norm	DIN	Nº ORDER 13.025		\Z69		Next 604

PATH: 24981A/Diagrams/02-Connectors/603

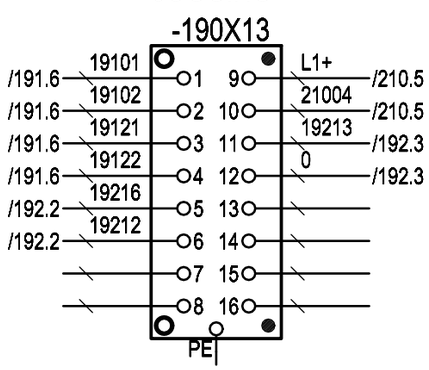

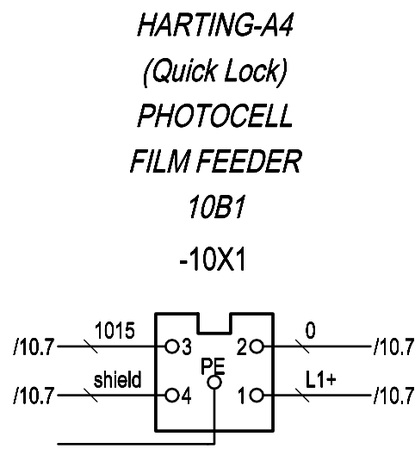

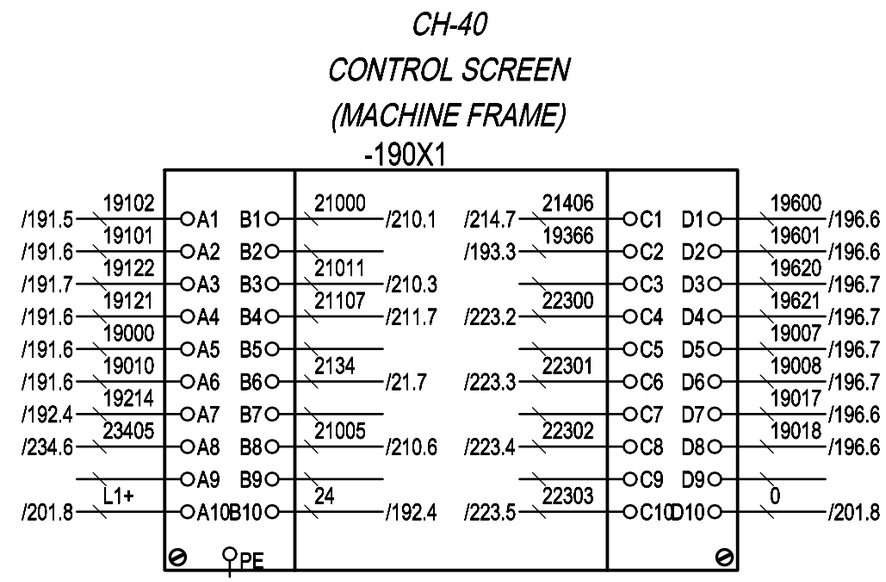

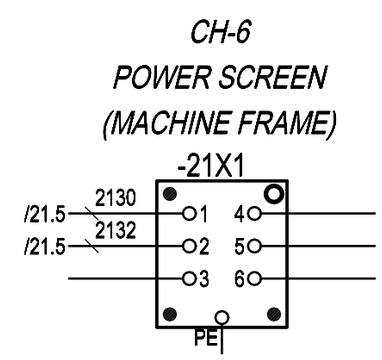

3				Date	\Z72	NURTURE, INC. (USA)	ACMAVOLPAK	TYPE OF MACHINE: SM-360 F4 WD	CONNECTORS MAIN CABINET / MACHINE	=
2				Draw.	A.LLEONART			PROJECT Nº: 24981A		+
1	DIN			Print.	22.07.2014					Sheet 604
	Modification	Date	Name	Norm	DIN	Nº ORDER 13.025		\Z69		Next 605

1	2	3	4	5	6	7	8

HARTING-10
FRONT BOTTOM
SEALING
-40X1

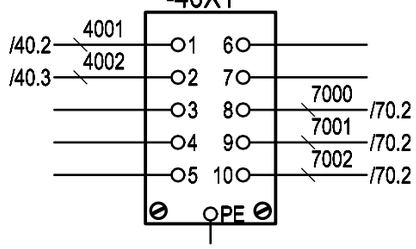

HARTING-10
BACK BOTTOM
SEALING
-40X2

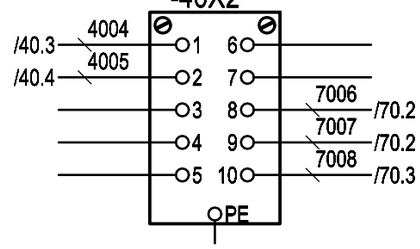

HARTING-10
FRONT BOTTOM
SEALING
-40X5

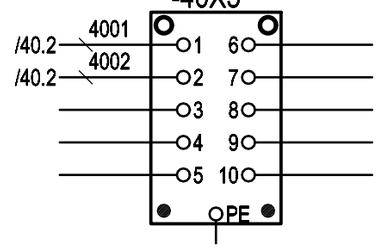

HARTING-10
BACK BOTTOM
SEALING
-40X6

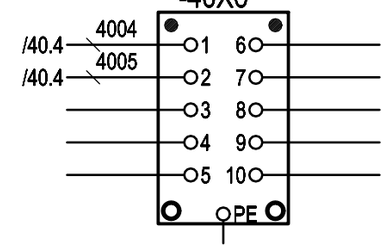

HARTING-10
VERTICAL
SEAL 1ª
-40X3

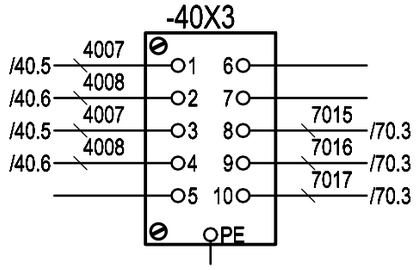

HARTING-10
VERTICAL
SEAL 2ª
-40X4

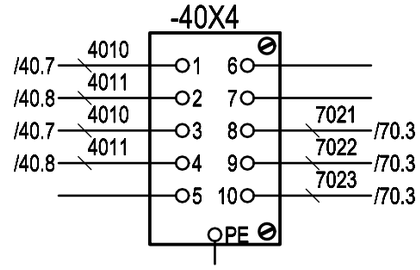

HARTING-10
VERTICAL
SEAL 3ª
-41X1

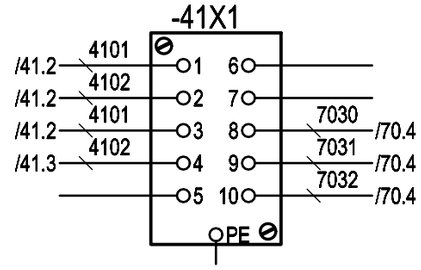

HARTING-10
VERTICAL
SEAL 4ª
-41X2

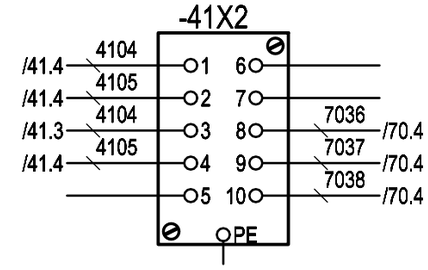

HARTING-10
VERTICAL
SEAL 5ª
-42X1

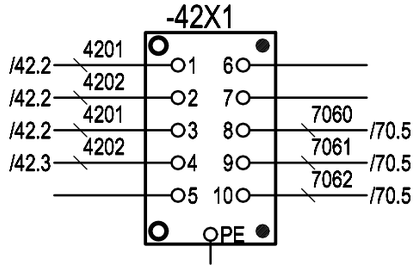

HARTING-10
VERTICAL
SEAL 6ª
-42X2

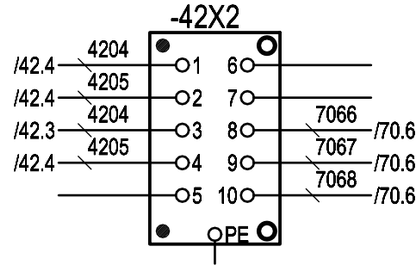

HARTING-10
VERTICAL
SEAL 7ª
-42X3

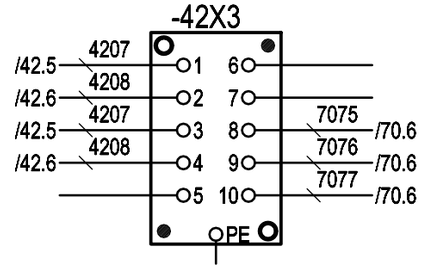

HARTING-10
VERTICAL
SEAL 8ª
-42X4

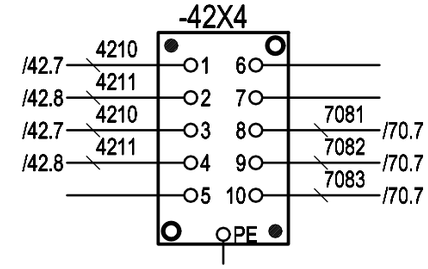

ATENTION to CODING SYSTEM

⊘ SCREW	O BUSH	● GUIDE PIN

3				Date	\Z72	NURTURE, INC. (USA)	ACMAVOLPAK	TYPE OF MACHINE: SM-360 F4 WD	CONNECTORS HEATING	=
2				Draw.	A.LLEONART			PROJECT Nº: 24981A		+
1	DIN			Print.	22.07.2014					Sheet 605
	Modification	Date	Name	Norm	DIN	Nº ORDER 13.025		\Z69		Next 606

PATH: 24981A/Diagrams/02-Connectors/605

1	2	3	4	5	6	7	8

HARTING-10
FRONT TOP
SEAL 1-1
-41X3

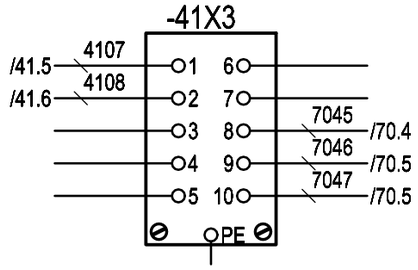

HARTING-10
BACK TOP
SEAL 1-1
-41X4

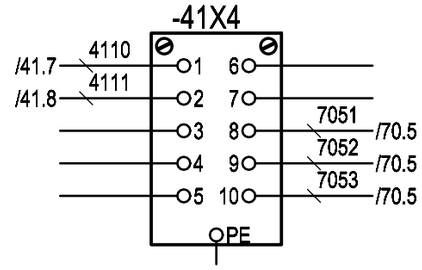

HARTING-10
FRONT TOP
SEAL 2-1
-43X1

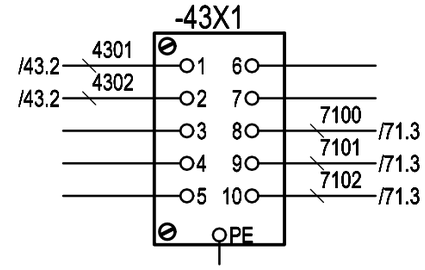

HARTING-10
BACK TOP
SEAL 2-1
-43X2

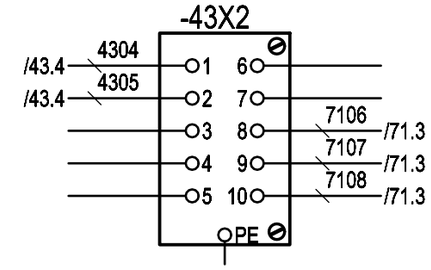

HARTING-10
FRONT TOP
SEAL 1-2
-41X5

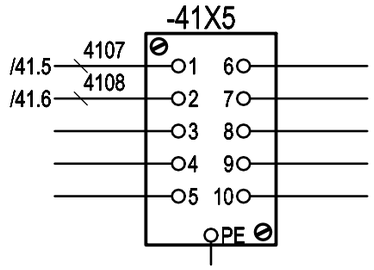

HARTING-10
BACK TOP
SEAL 1-2
-41X6

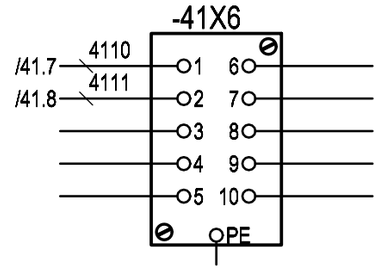

HARTING-10
FRONT TOP
SEAL 2-2
-43X3

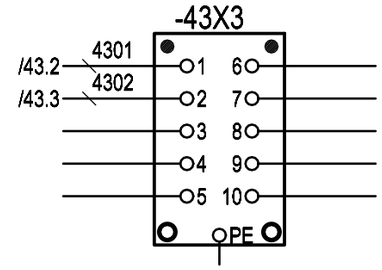

HARTING-10
BACK TOP
SEAL 2-2
-43X4

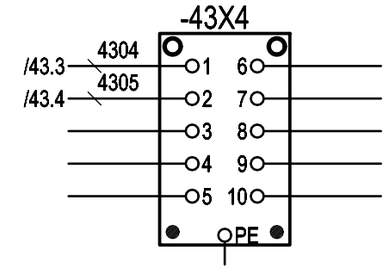

ATENTION to CODING SYSTEM

⊘ SCREW	O BUSH	● GUIDE PIN

3				Date	\Z72
2				Draw.	A.LLEONART
1	DIN			Print.	22.07.2014
	Modification	Date	Name	Norm	DIN

NURTURE, INC.
(USA)
Nº ORDER 13.025

ACMAVOLPAK

TYPE OF MACHINE: SM-360 F4 WD
PROJECT Nº: 24981A
\Z69

CONNECTORS HEATING

=
+
Sheet 606
Next 607

PATH: 24981A/Diagrams/02-Connectors/606

1	2	3	4	5	6	7	8

HARTING-10
FRONT CAP 1
POINT
-46X1

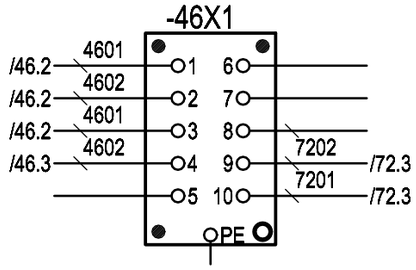

HARTING-10
BACK CAP 1
SEAL
-46X2

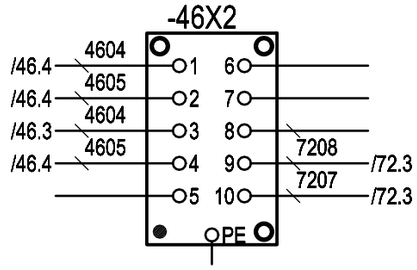

HARTING-10
FRONT CAP 2
SEAL POINT
-46X3

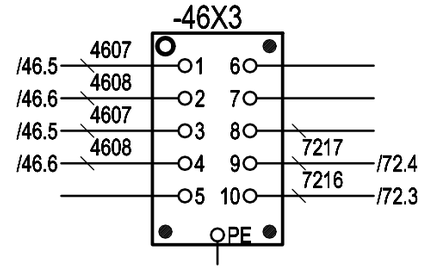

HARTING-10
BACK CAP 2
SEAL POINT
-46X4

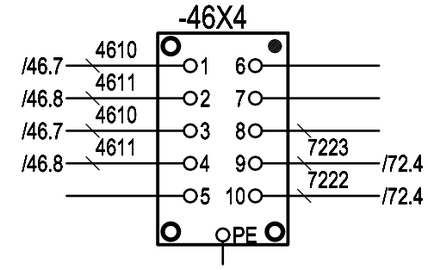

HARTING-10
FRONT CAP 3
POINT
-47X1

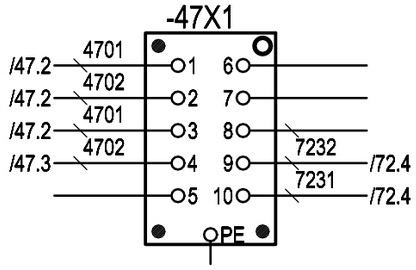

HARTING-10
BACK CAP 3
SEAL
-47X2

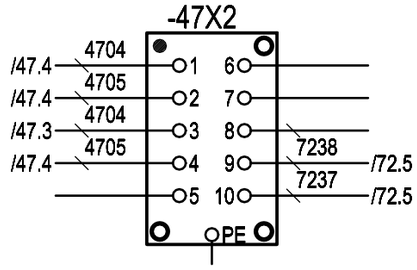

HARTING-10
FRONT CAP 4
POINT
-47X3

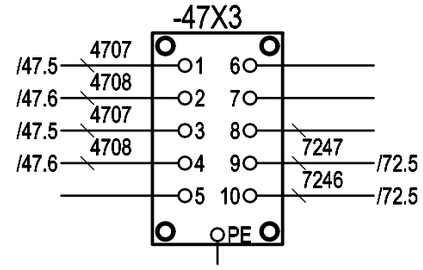

HARTING-10
BACK CAP 4
SEAL
-47X4

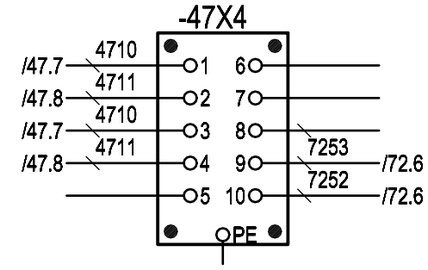

ATENTION to CODING SYSTEM

⊘ SCREW	○ BUSH	● GUIDE PIN

3				Date	\Z72	NURTURE, INC. (USA)	ACMAVOLPAK	TYPE OF MACHINE: SM-360 F4 WD	CONNECTORS HEATING CAPS TOP	=
2				Draw.	A.LLEONART			PROJECT Nº: 24981A		+
1	DIN			Print.	22.07.2014					Sheet 607
	Modification	Date	Name	Norm	DIN	Nº ORDER 13.025		\Z69		Next 609

1	2	3	4	5	6	7	8

CH-24
CONTROL
PEROXIDE MODULE CABINET
(STERIS)
-310X1

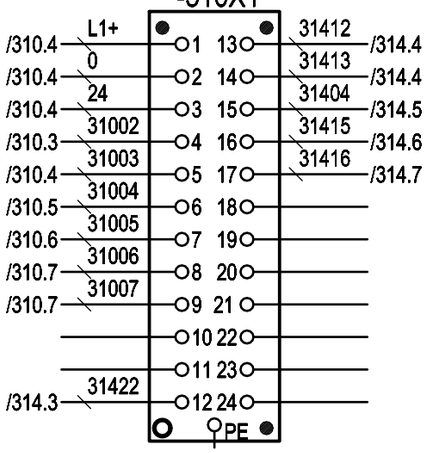

CH-06
DEHUMIDIFIER
MOTOR
(MU)
-160X2

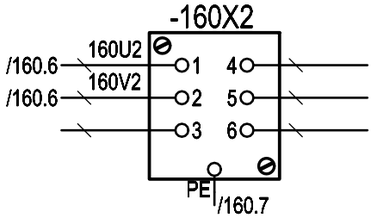

CH-06
DUST COLLECTOR
PEROXIDE 1
-162X1

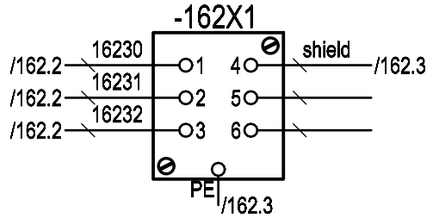

CH-06
DUST COLLECTOR
PEROXIDE 2
-162X2

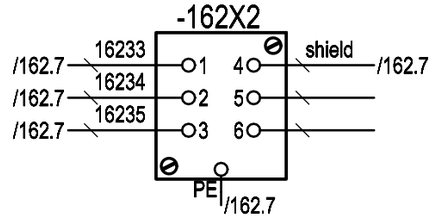

CH-06
220V SUPPLY
PEROXIDE MODULE CABINET
(STERIS)
-163X1

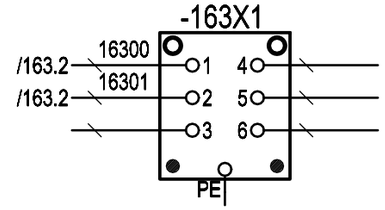

3				Date	\Z72	NURTURE, INC. (USA)	ACMAVOLPAK	TYPE OF MACHINE: SM-360 F4 WD	CONNECTORS MAIN CABINET / STERIS	=
2				Draw.	A.LLEONART			PROJECT Nº: 24981A		+
1	DIN			Print.	22.07.2014					Sheet 609
	Modification	Date	Name	Norm	DIN	Nº ORDER 13.025		\Z69		Next 612

1	2	3	4	5	6	7	8

CH-24
CONTROL
MAS-734
(805E1)
-242X1

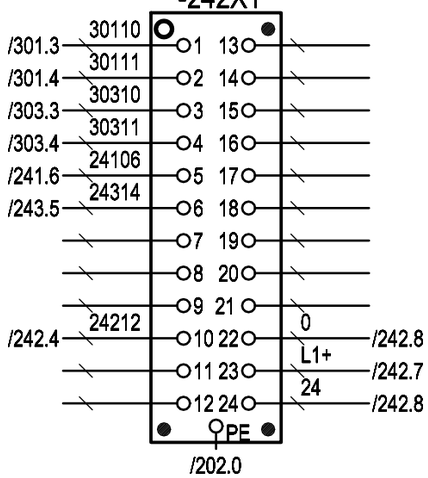

HARTING-A4
(Quick Lock)
PROXIMITY SWITCH
HOPPER LEVEL
-218X4

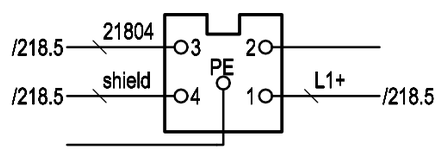

CH-06
ALIMENTACION TOLVA
-101X1

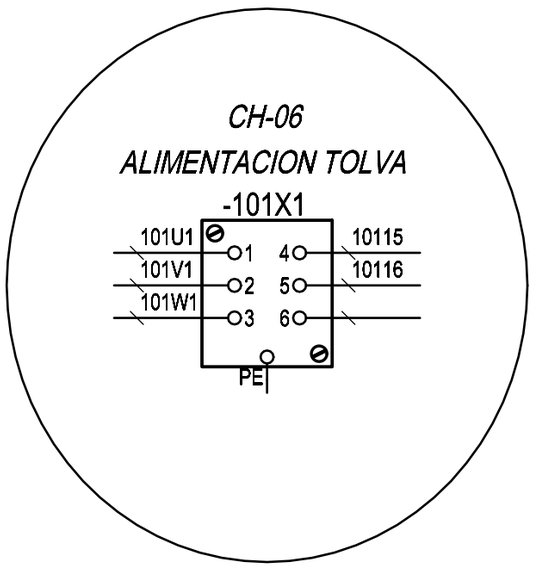

HARTING-Q5
(Quick Lock)
PRODUCT / CIP
RETURN VALVE
CIP (9)
-240X4

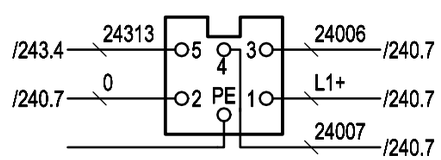

HARTING-A4
(Quick Lock)
LEVEL
SWITCH HOPPER
(SAFETY)
-241X7

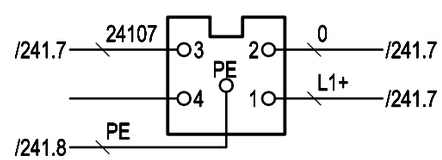

HARTING-Q5
(Quick Lock)
DRAINAGE
SECURITY
VALVE
-241X2

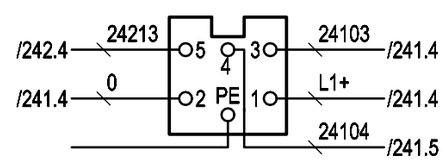

3				Date	\Z72	NURTURE, INC. (USA)	ACMAVOLPAK	TYPE OF MACHINE: SM-360 F4 WD	CONNECTORS LIQUID FILLER MAS-734	=	
2				Draw.	A.LLEONART			PROJECT Nº: 24981A		+	
1	DIN			Print.	22.07.2014					Sheet 612	
	Modification	Date	Name	Norm	DIN	Nº ORDER 13.025		\Z69		Next 614	

PATH: 24981A/Diagrams/02-Connectors/612

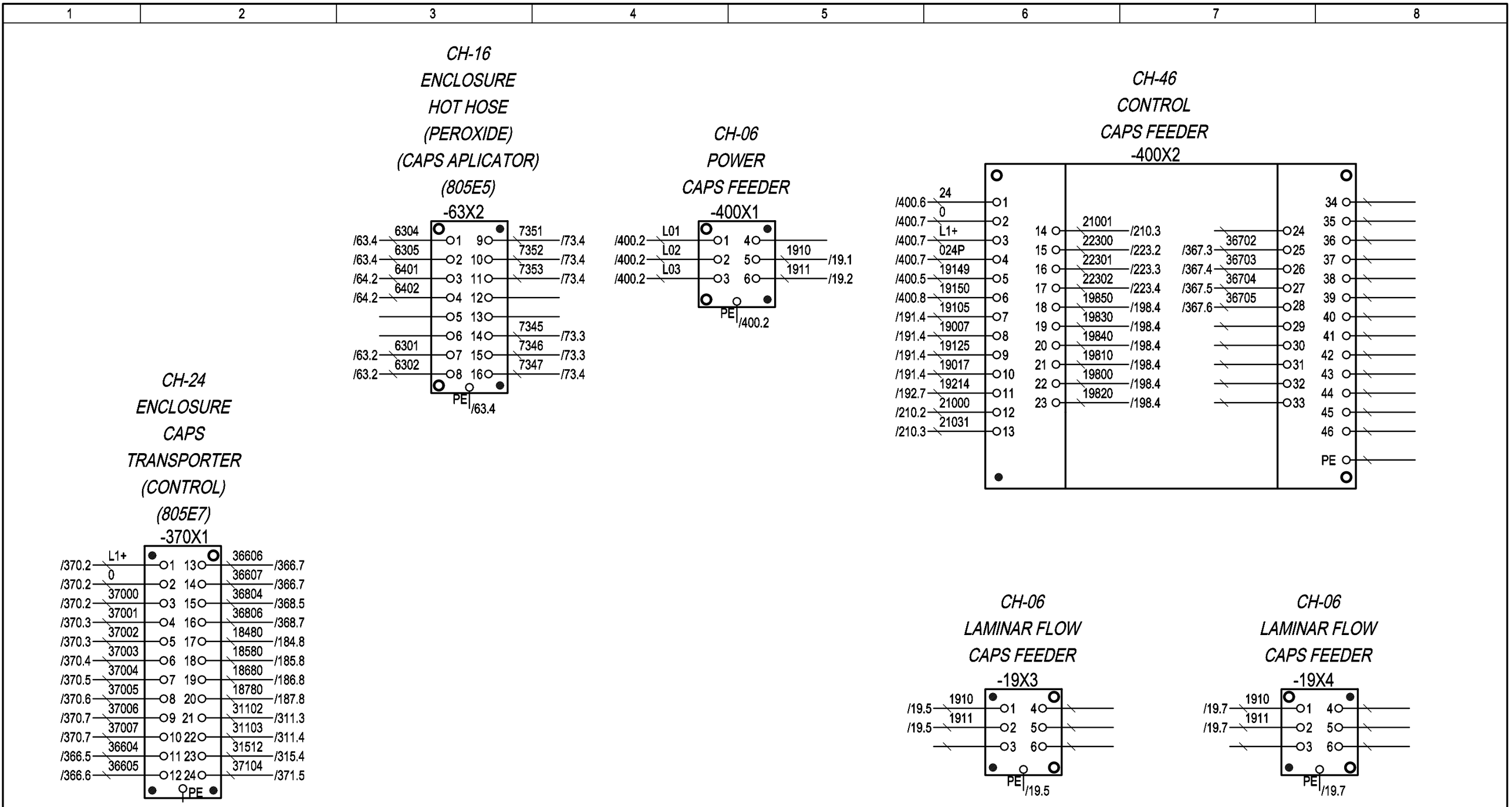

3				Date	\Z72	NURTURE, INC. (USA)	ACMAVOLPAK	TYPE OF MACHINE: SM-360 F4 WD	CONNECTORS MAIN CABINET / CAPS APLICATOR CA-998/4	=
2				Draw.	A.LLEONART			PROJECT Nº: 24981A		+
1	DIN			Print.	22.07.2014					Sheet 614
	Modification	Date	Name	Norm	DIN	Nº ORDER 13.025		\Z69		Next 615

PATH: 24981A/Diagrams/02-Connectors/614

1	2	3	4	5	6	7	8

+CB4

CH-06
CAPS
TRANSPORTER
(CAP 1)
-401X1

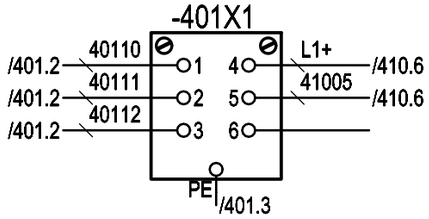

CH-06
BELT
REVERSE 1
(POWER SUPPLY 1 - 4)
-401X2

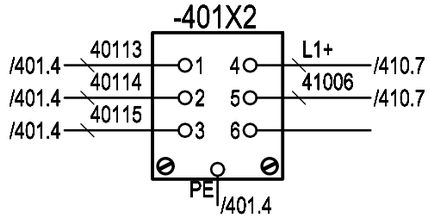

CH-06
MOTOR
ELEVATOR 1
-401X3

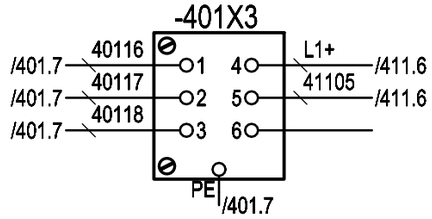

HARTING-A4
(Quick Lock)
VIBRATOR 1
-405X1

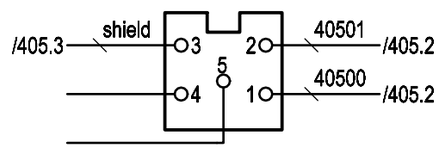

HARTING-A4
(Quick Lock)
SAFETY
DOOR
HOPPER 1
-410X7

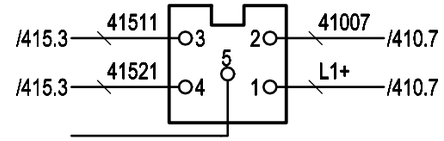

CH-06
CAPS
TRANSPORTER
(CAP 2)
-402X1

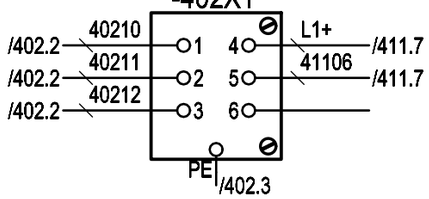

CH-06
BELT
REVERSE 2
(POWER SUPPLY 2 - 3)
-402X2

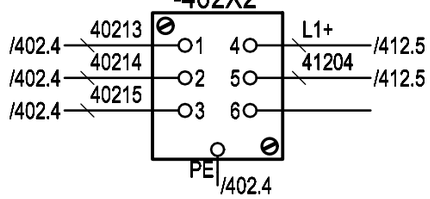

CH-06
MOTOR
ELEVATOR 2
-402X3

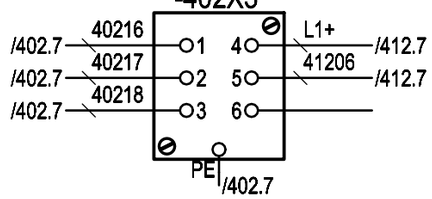

HARTING-A4
(Quick Lock)
VIBRATOR 2
-405X2

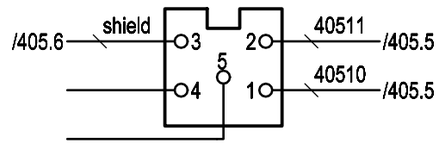

HARTING-A4
(Quick Lock)
SAFETY
DOOR
HOPPER 2
-411X7

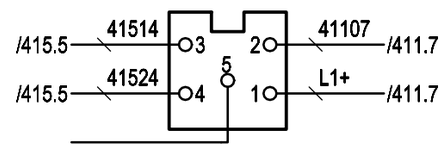

CH-06
CAPS
TRANSPORTER
(CAP 3)
-403X1

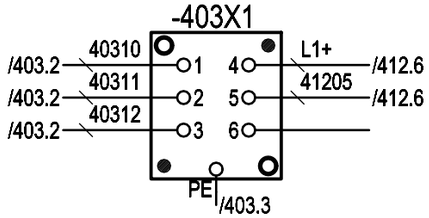

HARTING-A4
(Quick Lock)
VIBRATOR 3
-406X1

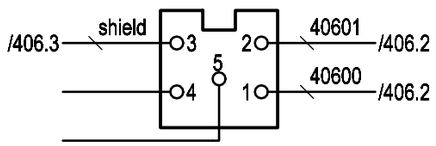

CH-06
CAPS
TRANSPORTER
(CAP 4)
-404X1

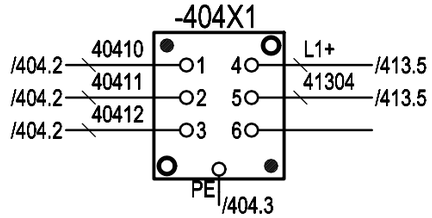

HARTING-A4
(Quick Lock)
VIBRATOR 4
-406X2

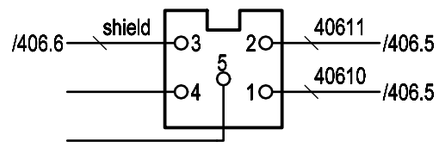

3				Date	\Z72	NURTURE, INC. (USA)	ACMAVOLPAK	TYPE OF MACHINE: SM-360 F4 WD	CONNECTORS CAPS FEEDER	=
2				Draw.	A.LLEONART			PROJECT Nº: 24981A		+
1	DIN			Print.	22.07.2014					Sheet 615
	Modification	Date	Name	Norm	DIN	Nº ORDER 13.025		\Z69		Next 616

1	2	3	4	5	6	7	8

+CB4

CH-06
BELT
REVERSE 3
(POWER SUPPLY /
EMPTY 1 - 4)
-403X2

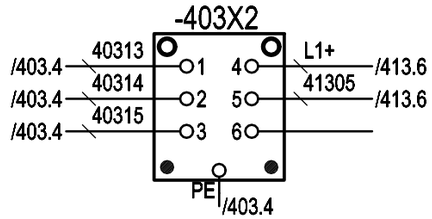

HARTING-8D
(Quick Lock)
CONTROL HOPPER 1
CAPS FEEDER
-410X0

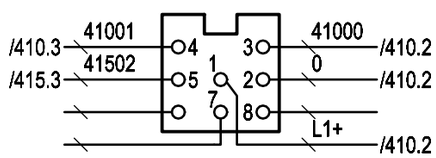

CH-06
BELT
REVERSE 4
(POWER SUPPLY /
EMPTY 2 - 3)
-404X2

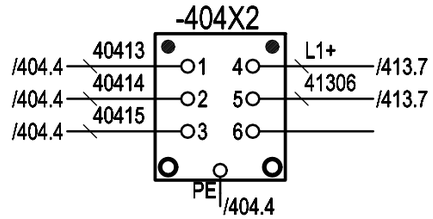

HARTING-8D
(Quick Lock)
CONTROL HOPPER 2
CAPS FEEDER
-411X0

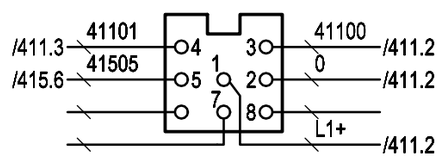

CH-06
LAMINAR FLOW
CAPS FEEDER
(ELEVATOR 1)
-19X1

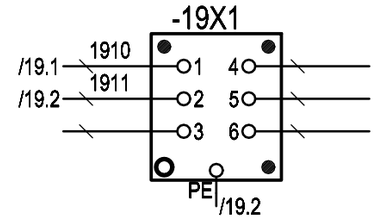

HARTING-8D
(Quick Lock)
CONTROL HOPPER 3
CAPS FEEDER
-412X0

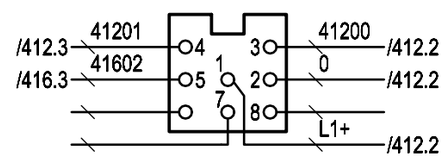

CH-06
LAMINAR FLOW
CAPS FEEDER
(ELEVATOR 2)
-19X2

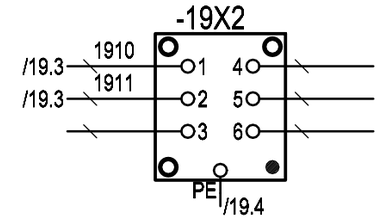

HARTING-8D
(Quick Lock)
CONTROL HOPPER 4
CAPS FEEDER
-413X0

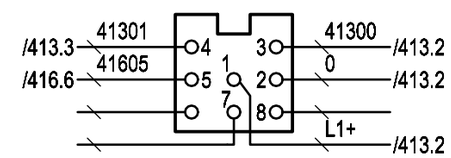

3				Date	\Z72	NURTURE, INC. (USA)	ACMAVOLPAK	TYPE OF MACHINE: SM-360 F4 WD	CONNECTORS CAPS FEEDER	=
2				Draw.	A.LLEONART			PROJECT Nº: 24981A		+
1	DIN			Print.	22.07.2014					Sheet 616
	Modification	Date	Name	Norm	DIN	Nº ORDER 13.025		\Z69		Next 620

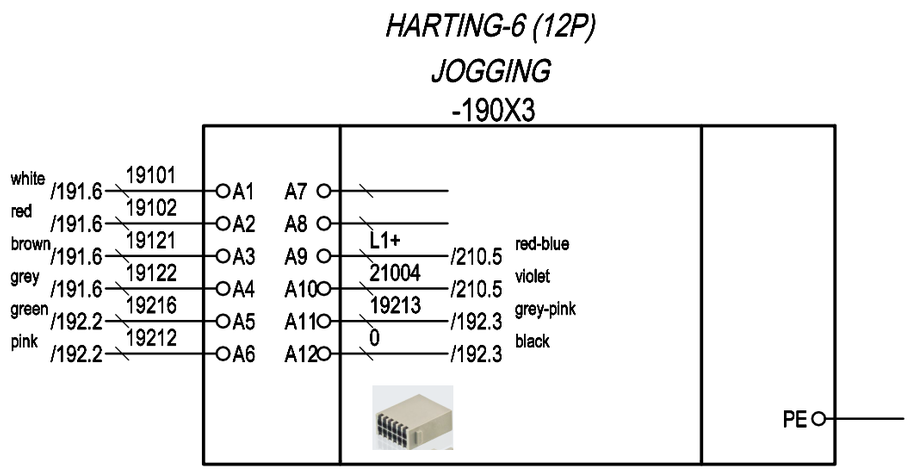

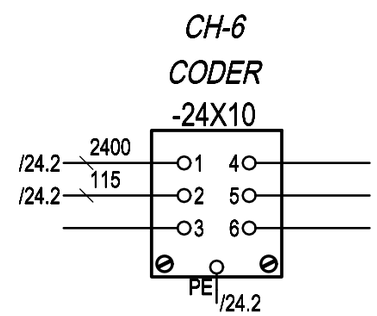

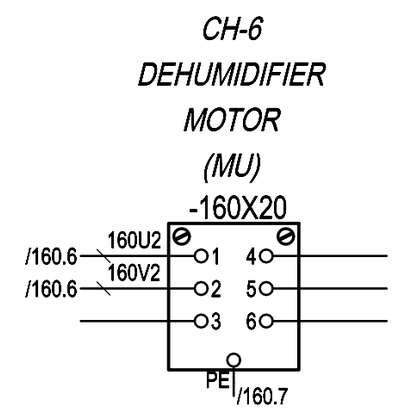

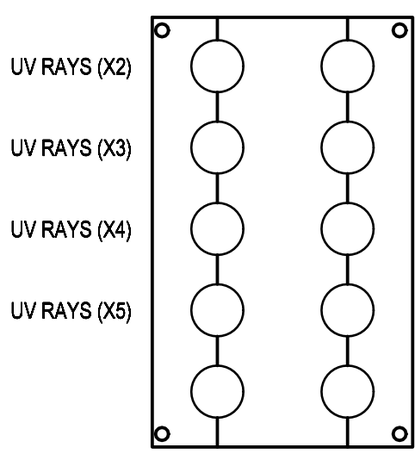

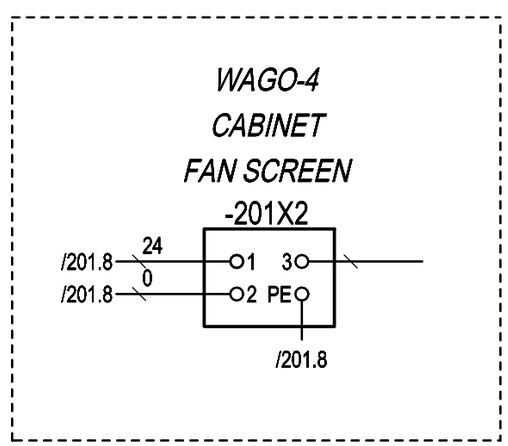

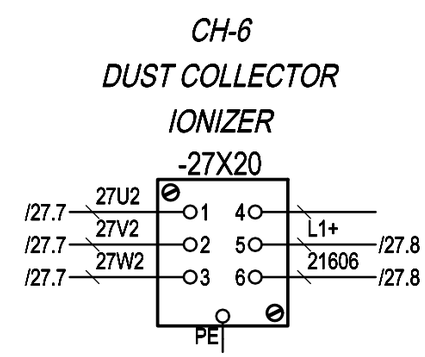

ATENTION to CODING SYSTEM

⊘ SCREW	O BUSH	● GUIDE PIN

3				Date	\Z72
2				Draw.	A.LLEONART
1	DIN			Print.	22.07.2014
	Modification	Date	Name	Norm	DIN

NURTURE, INC.
(USA)
Nº ORDER 13.025

ACMAVOLPAK

TYPE OF MACHINE: SM-360 F4 WD
PROJECT Nº: 24981A
\Z69

CONNECTORS MACHINE

=
+
Sheet 620
Next 650

PATH: 24981A/Diagrams/02-Connectors/620

1	2	3	4	5	6	7	8

CH-6
POWER
REEL SPLICE
AUTOMATIC
-500X0

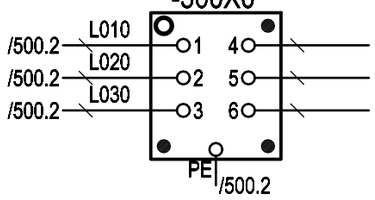

CH-46
CONTROL
REEL SPLICE
AUTOMATIC
-510X0

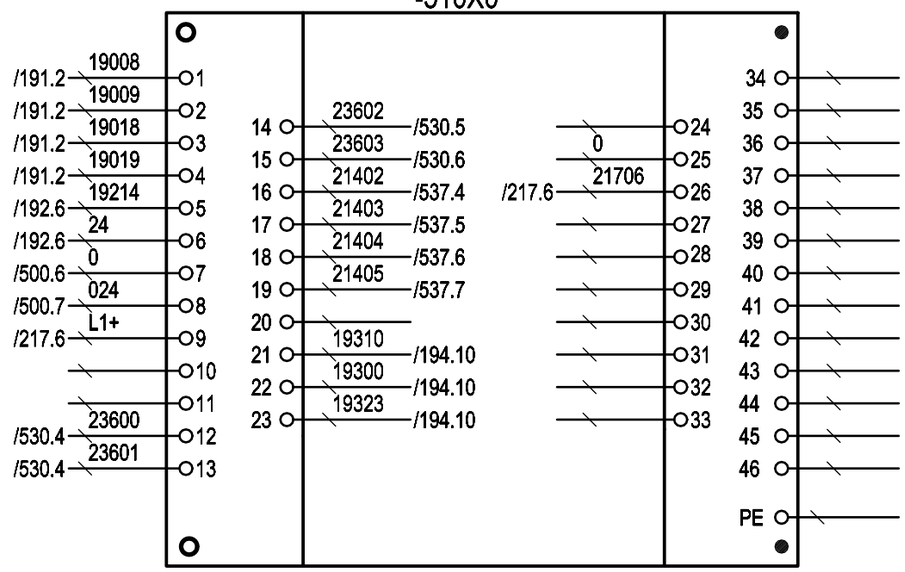

ATENTION to CODING SYSTEM

SCREW BUSH GUIDE PIN

3				Date	\Z72	NURTURE, INC. (USA)	ACMAVOLPAK	TYPE OF MACHINE: SM-360 F4 WD	CONNECTORS MAIN CABINET / REEL SPLICE AUTOMATIC
2				Draw.	A.LLEONART			PROJECT Nº: 24981A	
1	DIN			Print.	22.07.2014				Sheet 650
	Modification	Date	Name	Norm	DIN	Nº ORDER 13.025		\Z69	Next 651

1	2	3	4	5	6	7	8

CH-6
POWER
REEL SPLICE
AUTOMATIC
-500X1

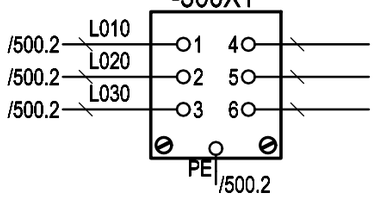

CH-46
CONTROL
REEL SPLICE
AUTOMATIC
-510X1

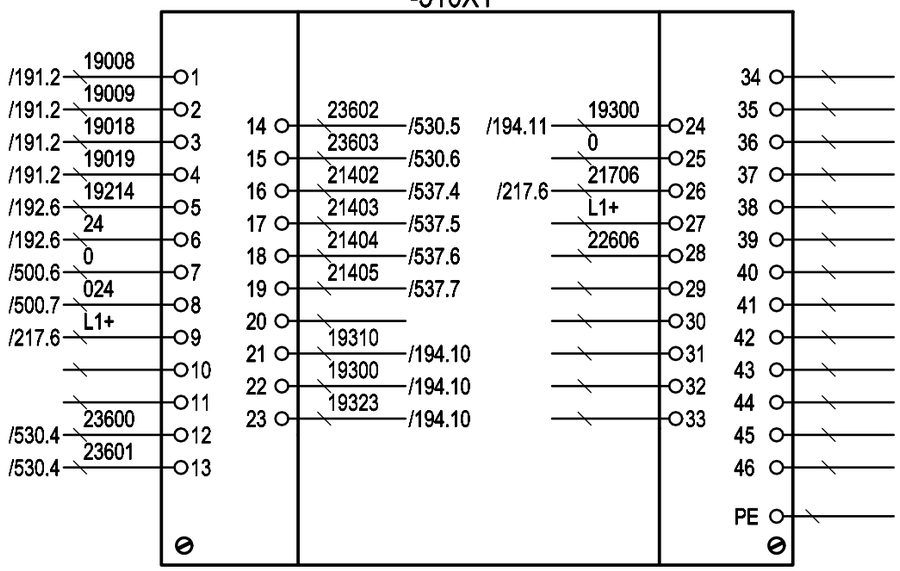

CH-24 (24p)
PROTECTIONS
REEL SPLICE
AUTOMATIC
-511X1

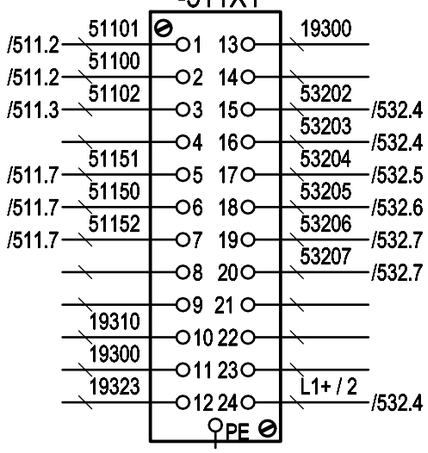

MURRPLASTIK
KDP 24/23
-651X1

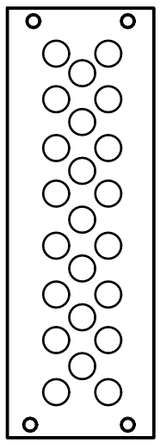

ATENTION to CODING SYSTEM

⊘ SCREW	O BUSH	● GUIDE PIN

3				Date	\Z72	NURTURE, INC. (USA)	ACMAVOLPAK	TYPE OF MACHINE: SM-360 F4 WD	CONNECTORS REEL SPLICE AUTOMATIC
2				Draw.	A.LLEONART			PROJECT Nº: 24981A	
1	DIN			Print.	22.07.2014				Sheet 651
	Modification	Date	Name	Norm	DIN	Nº ORDER 13.025		\Z69	Next

PATH: 24981A/Diagrams/02-Connectors/651

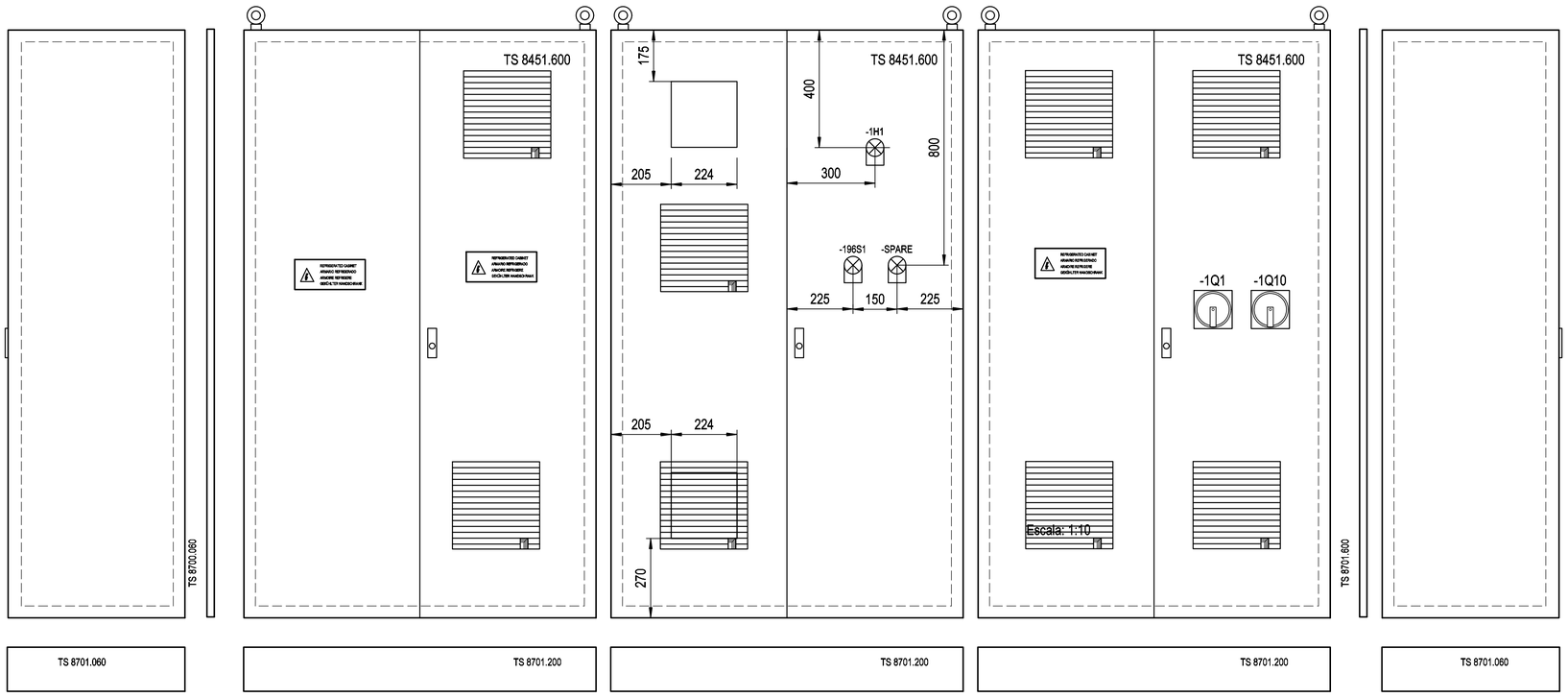

3			24981A/0	Diagrams	22.07.2014	NURTURE, INC. (USA)	ACMAVOLPAK	TYPE OF MACHINE: SM-360 F4 WD	MAIN CABINET	=
2				Draw.	A.LLEONART			PROJECT Nº: 24981A		+
1				Comp.						Sheet 800
	Modification	Date	Name	Norm	DIN	Nº ORDER 13.025		\Z69		8 Sh.

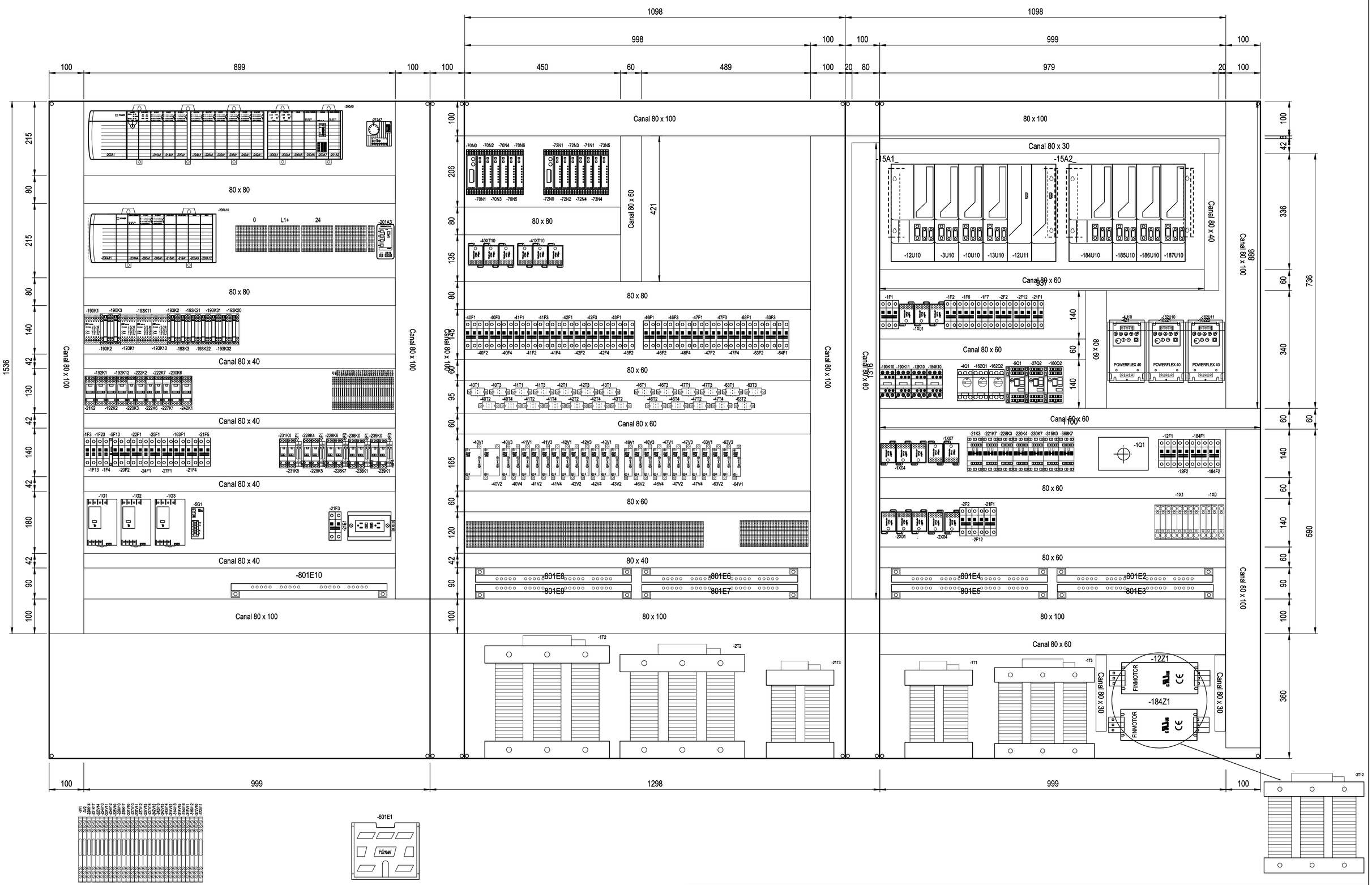

3			24981A/D	Rotams	22.07.2014	
2				Draw.	A.LLEONART	
1				Comp.		
	Modification	Date	Name	Norm	DIN	

NURTURE, INC.
(USA)

Nº ORDER 13.025

ACMAVOLPAK

TYPE OF MACHINE: SM-360 F4 WD
PROJECT Nº: 24981A
\Z69

MAIN CABINET

=
+
Sheet 801
8 Sh.

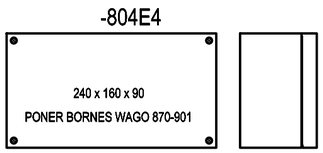

ENCLOSURE UNWINDER

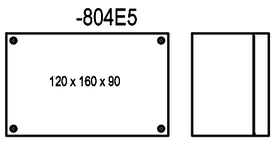

PROTECTIONS UNWINDER

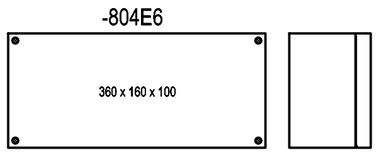

ENCLOSURE SEALING MODULE

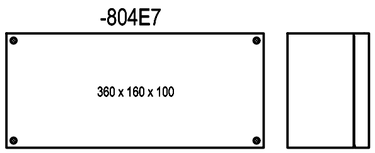

ENCLOSURE FILLING MODULE

DOSERING PUSH-BUTTON
(BACK)
CAPS FEEDER

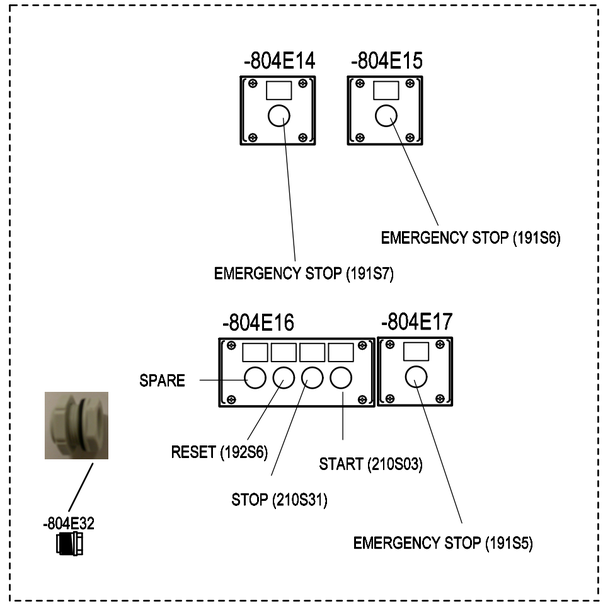

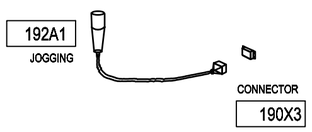

JOGGING

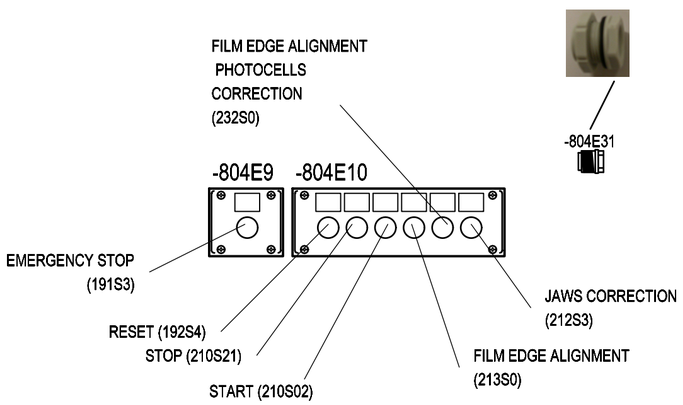

SEALING PUSH-BUTTON 2

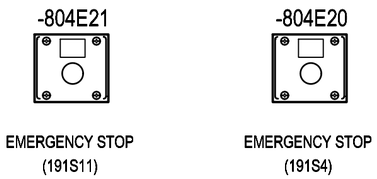

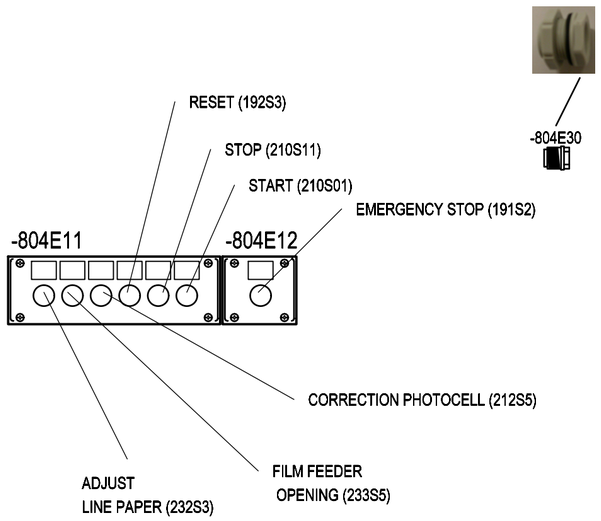

SEALING PUSH-BUTTON 1

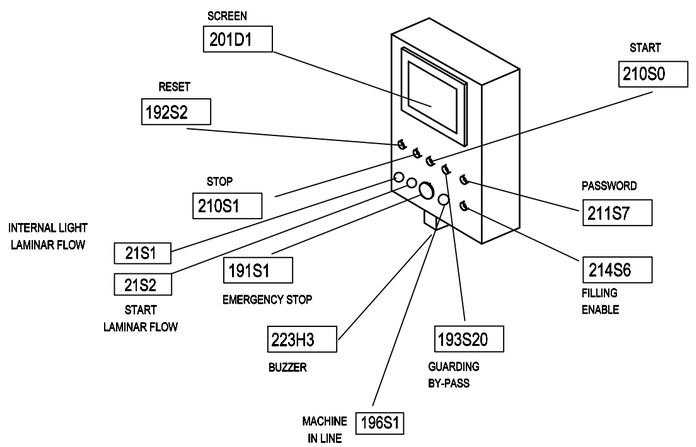

3				Date	22.07.2014	NURTURE, INC. (USA)	ACMAVOLPAK	TYPE OF MACHINE: SM-360 F4 WD	MAIN CABINET
2				Draw.	A.LLEONART			PROJECT Nº: 24981A	=
1				Comp.					+
	Modification	Date	Name	Norm	DIN	Nº ORDER 13.025		DRAWING Nº	Sheet 804
									Next 805

-805E1

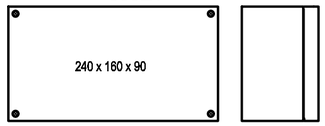

ENCLOSURE HOPPER

-805E2

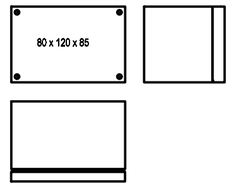

ENCLOSURE
HOT HOSE
(PEROXIDE)
(UNWINDER)

-805E4

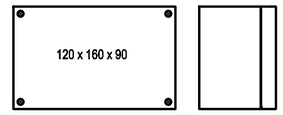

ENCLOSURE
CONTROL STREAM
INJECTOR

-805E5

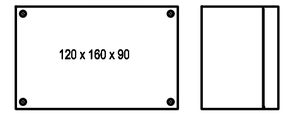

ENCLOSURE
HOT HOSE
HEATING NOZZLE
(PEROXIDE)
(CAPS APLICATOR)

-805E7

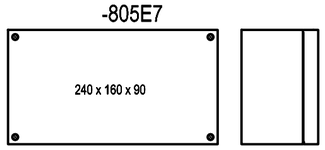

ENCLOSURE
CAPS
TRANSPORTER

-805E8

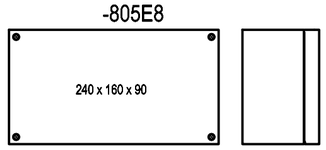

ENCLOSURE
PHOTOCELL
CAP
IN POSITION

-805E9

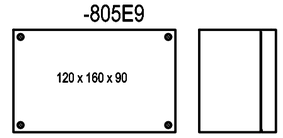

ENCLOSURE
IONIZER SYSTEM
(DUST COLLECTOR)
DA100 BP

3				Date	22.07.2014	NURTURE, INC. (USA)	ACMAVOLPAK	TYPE OF MACHINE: SM-360 F4 WD	MAIN CABINET	=
2				Draw.	A.LLEONART			PROJECT Nº: 24981A		+
1				Comp.						Sheet 805
	Modification	Date	Name	Norm	DIN	Nº ORDER 13.025		DRAWING Nº		Next 807

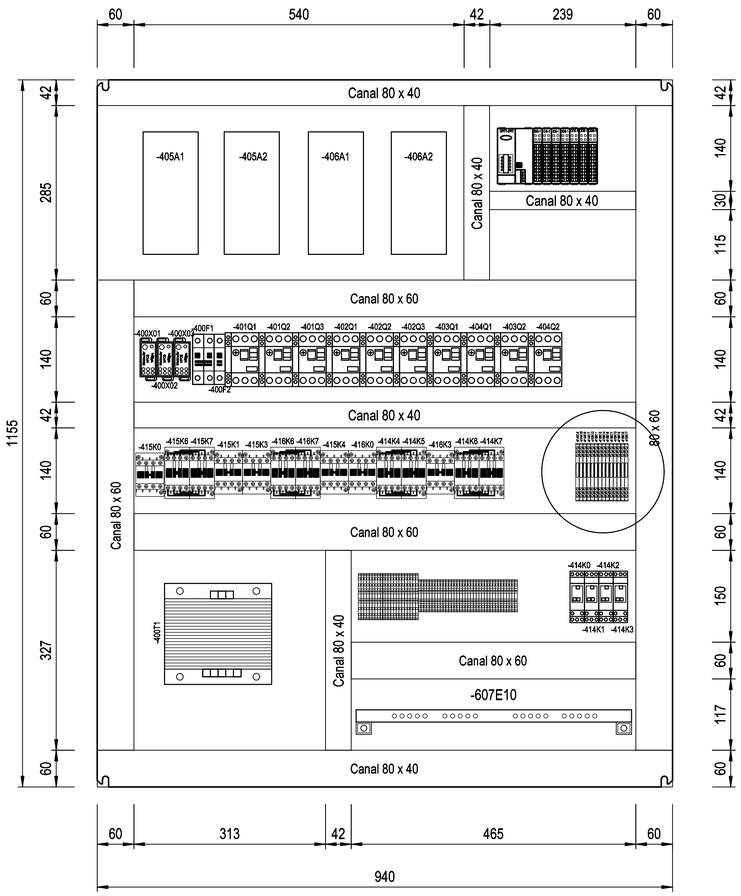

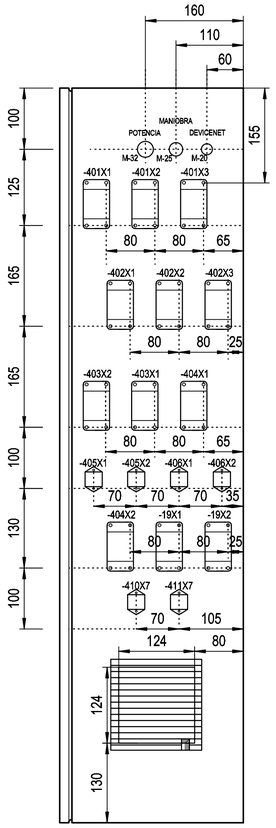

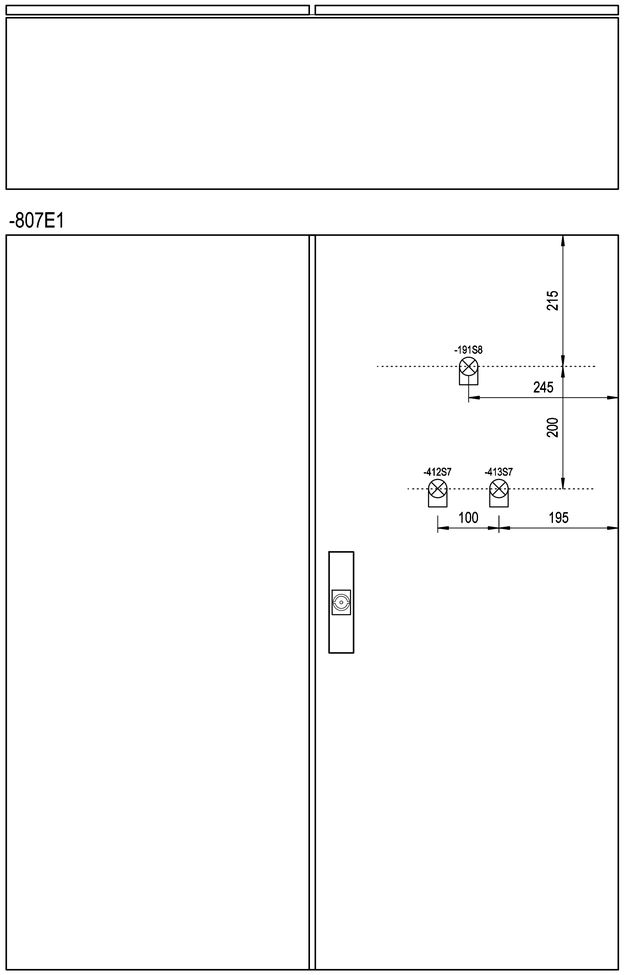

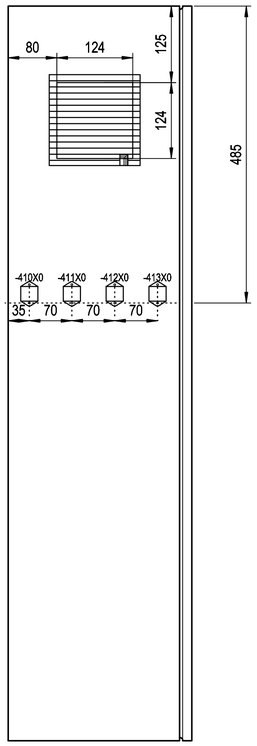

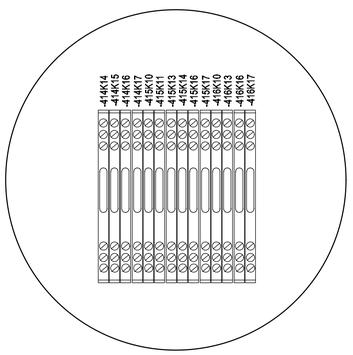

3			24981A/D	Bgtams	22.07.2014	NURTURE, INC. (USA)	ACMAVOLPAK	TYPE OF MACHINE: SM-360 F4 WD	MAIN CABINET CAPS FEEDER	=
2				Draw.	A.LLEONART			PROJECT Nº: 24981A		+CB4
1				Comp.				\Z69		Sheet 807
	Modification	Date	Name	Norm.	DIN	Nº ORDER 13.025				8 Sh.

1	2	3	4	5	6	7	8

-608W1 O	CANAL CABLES INOX	4.03.03.241.038	9m	REJILLA CF54/100 INOX
-608W2 O	CANAL CABLES INOX	4.03.03.241.041	6m	REJILLA CF54/50 INOX
-608W3 O	CANAL CABLES INOX	4.03.03.241.042	9m	REJILLA TXF35 INOX
-608W4 O	CANAL CABLES INOX	4.03.03.241.045	15m	REJILLA CF105/200 INOX
-608W5 O	CANAL CABLES INOX	4.03.03.241.059	6m	REJILLA CF54/200 INOX
-608W6 O	CANAL CABLES INOX	4.03.03.241.047	6m	REJILLA CF105/400 INOX
-608W10 O	CANAL CABLES INOX	4.03.03.241.031	25	ACCESORIO UNION BANDEJA RAPIDO
-608W6.1 O	CANAL CABLES INOX	4.03.03.241.058	4m	TAPA INOX p/REJILLA 400mm
-608W0 O	CANAL CABLES INOX	4.03.03.241.055	10	CLIP TAPA INOX p/REJILLA

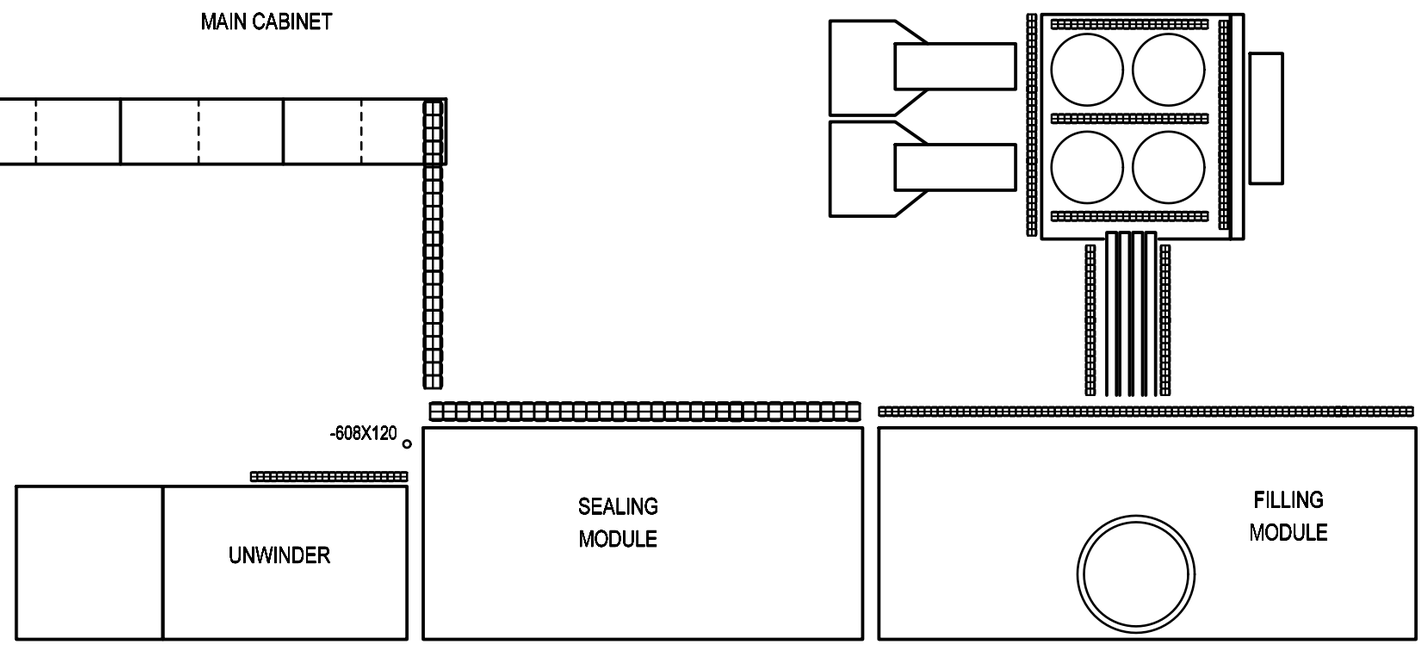

3				Date	\Z72	NURTURE, INC. (USA)	ACMAVOLPAK	TYPE OF MACHINE: SM-360 F4 WD	MAIN CABINET	=
2				Draw.	A.LLEONART			PROJECT Nº: 24981A		+
1	DIN			Print.	22.07.2014					Sheet 808
	Modification	Date	Name	Norm	DIN	Nº ORDER 13.025		\Z69		Next 809

PATH: 24981A/Diagrams/03-Lay-out/808

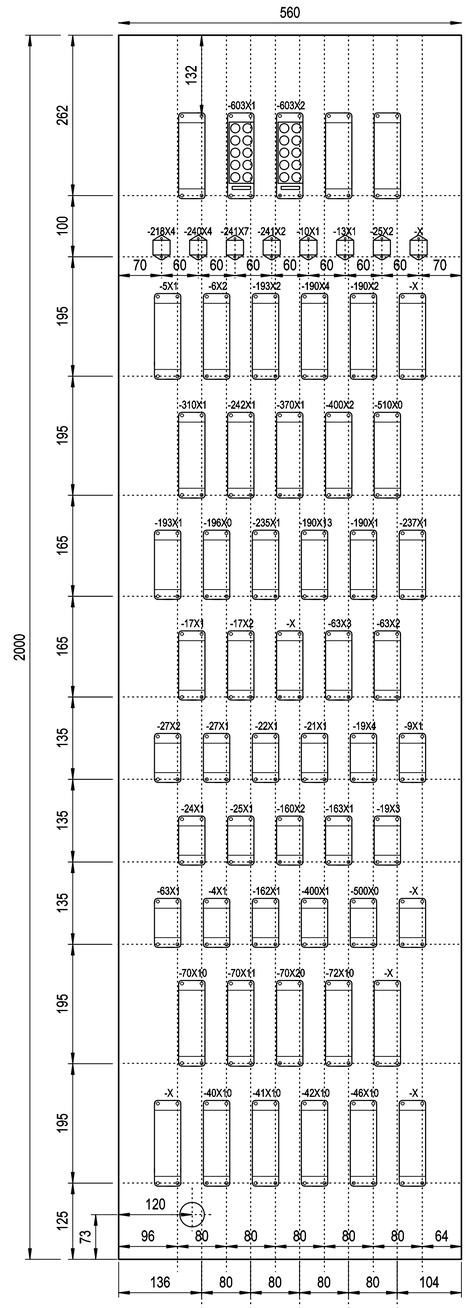

LADO PLACA
FONDO ARMARIO

3			24981A/D	Rgtarns	22.07.2014	NURTURE, INC. (USA)	ACMAVOLPAK
2				Draw.	A.LLEONART		
1				Comp.			
	Modification	Date	Name	Norm	DIN	Nº ORDER 13.025	

TYPE OF MACHINE: SM-360 F4 WD
PROJECT Nº: 24981A
\Z69

MAIN CABINET
MOUNTING
PLATE CONNECTORS

=
+
Sheet 809
8 Sh.

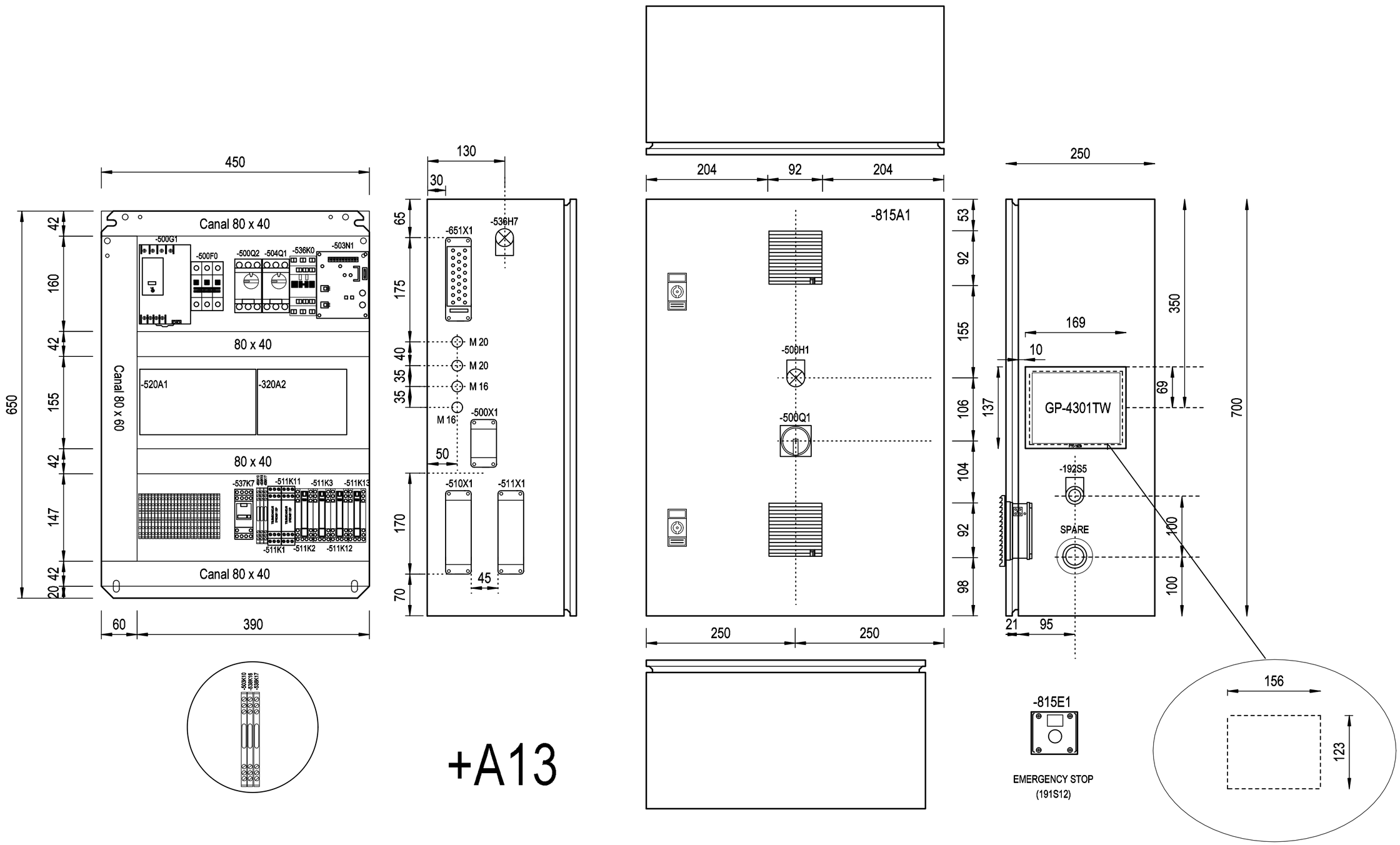

3				Date	22.07.2014	NURTURE, INC. (USA)	ACMAVOLPAK	TYPE OF MACHINE: SM-360 F4 WD	ELECTRICAL PLATE REEL SPLICE AUTOMATIC	=
2				Draw.	A.LLEONART			PROJECT Nº: 24981A		+
1				Comp.						Sheet 815
	Modification	Date	Name	Norm	DIN	Nº ORDER 13.025		DRAWING Nº		Next

1	2	3	4	5	6	7	8

TERMINAL VALVES

POS.		WIRING DIAGRAM			Description
1	impulse valve 5/2 ways	-324Y0	14		UNWINDER BRAKE DOWN
		-324Y1	12		UNWINDER BRAKE UP
2	impulse valve 5/2 ways	-324Y2	14		UNWINDER ARM MINIMUM
		-324Y3	12		UNWINDER ARM MAXIMUM
3	monoestable valve 3/2 ways / monoestable valve 3/2 ways	-324Y4	14		REEL CHANGE
		-324Y5	12		FILM COIL JUNCTION
4	monoestable valve 5/2 ways	-324Y6	14		BRAKE ZIPPER UNWINDER
			12		
5	monoestable valve 5/2 ways	-325Y0	14		LEFT BOTTOM PERFORATION PISTON 1-2
			12		
6	monoestable valve 5/2 ways	-325Y2	14		LEFT BOTTOM PERFORATION PISTON 3-4
			12		
7	monoestable valve 3/2 ways / monoestable valve 3/2 ways	-325Y4	14		LEFT BOTTOM PERFORATION BLOWER 1-2
		-325Y5	12		LEFT BOTTOM PERFORATION BLOWER 3-4
8			14		SPARE
			12		
9	monoestable valve 5/2 ways	-326Y0	14		RIGHT BOTTOM PERFORATION PISTON 1-2
			12		
10	monoestable valve 5/2 ways	-326Y2	14		RIGHT BOTTOM PERFORATION PISTON 3-4
			12		
11	monoestable valve 3/2 ways / monoestable valve 3/2 ways	-326Y4	14		RIGHT BOTTOM PERFORATION BLOWER-1-2
		-326Y5	12		RIGHT BOTTOM PERFORATION BLOWER-3-4
12			14		SPARE
			12		

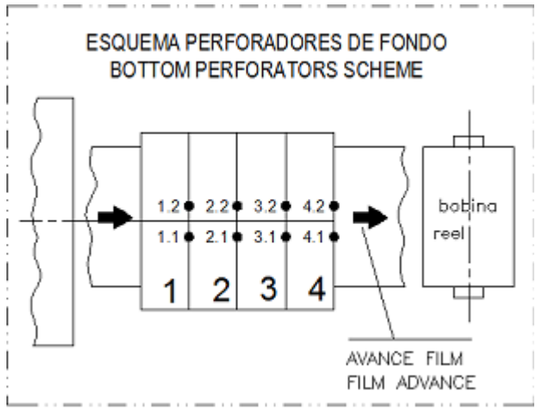

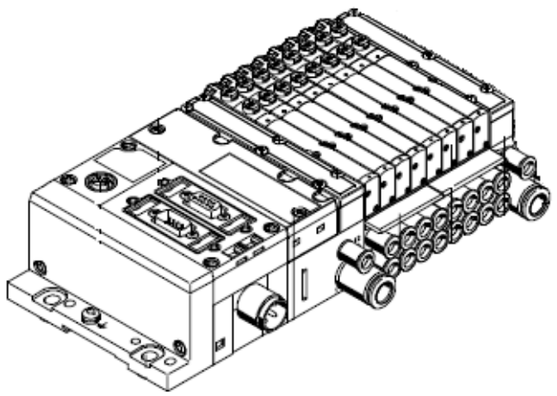

2498 1A

3				Date	\Z72	NURTURE, INC. (USA)	ACMAVOLPAK	TYPE OF MACHINE:	SM-360 F4 WD	NEUMATIC CONNECTION (UNWINDER)	=
2				Draw.	A.LLEONART			PROJECT Nº:	24981A		+
1	DIN			Print.	22.07.2014						Sheet 853
	Modification	Date	Name	Norm	DIN	Nº ORDER 13.025			\Z69		Next 854

1	2	3	4	5	6	7	8

TERMINAL VALVES

MPA-L

POS.		WIRING DIAGRAM	PIN	COLOR	Description
1	monoestable valve 5/2 ways	-301Y0	1	white	NOZZLE 1
			2	green	
2	monoestable valve 5/2 ways	-301Y1	3	yellow	NOZZLE 2
			4	grey	
3	monoestable valve 5/2 ways	-303Y0	5	pink	NOZZLE 3
			6	blue	
4	monoestable valve 5/2 ways	-303Y1	7	red	NOZZLE 4
			8	violet	
5	monoestable valve 5/2 ways		9	grey-pink	SPARE
			10	red-blue	
6	monoestable valve 5/2 ways		11	white-green	SPARE
			12	brown-green	

* brown ---> 0
* black ---> 0

2598 1A

3				Date	\Z72	NURTURE, INC. (USA)	ACMAVOLPAK	TYPE OF MACHINE: SM-360 F4 WD	NEUMATIC CONNECTION FILLER MAS-734	=
2				Draw.	A.LLEONART			PROJECT Nº: 24981A		+
1	DIN			Print.	22.07.2014					Sheet 854
	Modification	Date	Name	Norm	DIN	Nº ORDER 13.025		\Z69		Next 855

1	2	3	4	5	6	7	8

TERMINAL VALVES
CORNER PERFORATION

2598 1A

POS.		WIRING DIAGRAM	PIN	COLOR	Description
1	monoestable valve 5/2 ways	-229Y0	1	white	POUCH CORNER PERFORATION TOP (1)
			2	green	
2	monoestable valve 5/2 ways	-229Y10	3	yellow	POUCH CORNER PERFORATION BOTTOM (1)
			4	grey	
3	monoestable valve 5/2 ways	-229Y20	5	pink	POUCH CORNER PERFORATION TOP (2)
			6	blue	
4	monoestable valve 5/2 ways	-229Y30	7	red	POUCH CORNER PERFORATION BOTTOM (2)
			8	violet	
5	monoestable valve 5/2 ways	-231Y0	9	grey-pink	POUCH CORNER PERFORATION TOP (3)
			10	red-blue	
6	monoestable valve 5/2 ways	-231Y10	11	white-green	POUCH CORNER PERFORATION BOTTOM (3)
			12	brown-green	
7	monoestable valve 5/2 ways	-231Y20	13	white-yellow	POUCH CORNER PERFORATION TOP (4)
			14	yellow-brown	
8	monoestable valve 5/2 ways	-231Y30	15	white-grey	POUCH CORNER PERFORATION BOTTOM (4)
			16	grey-brown	

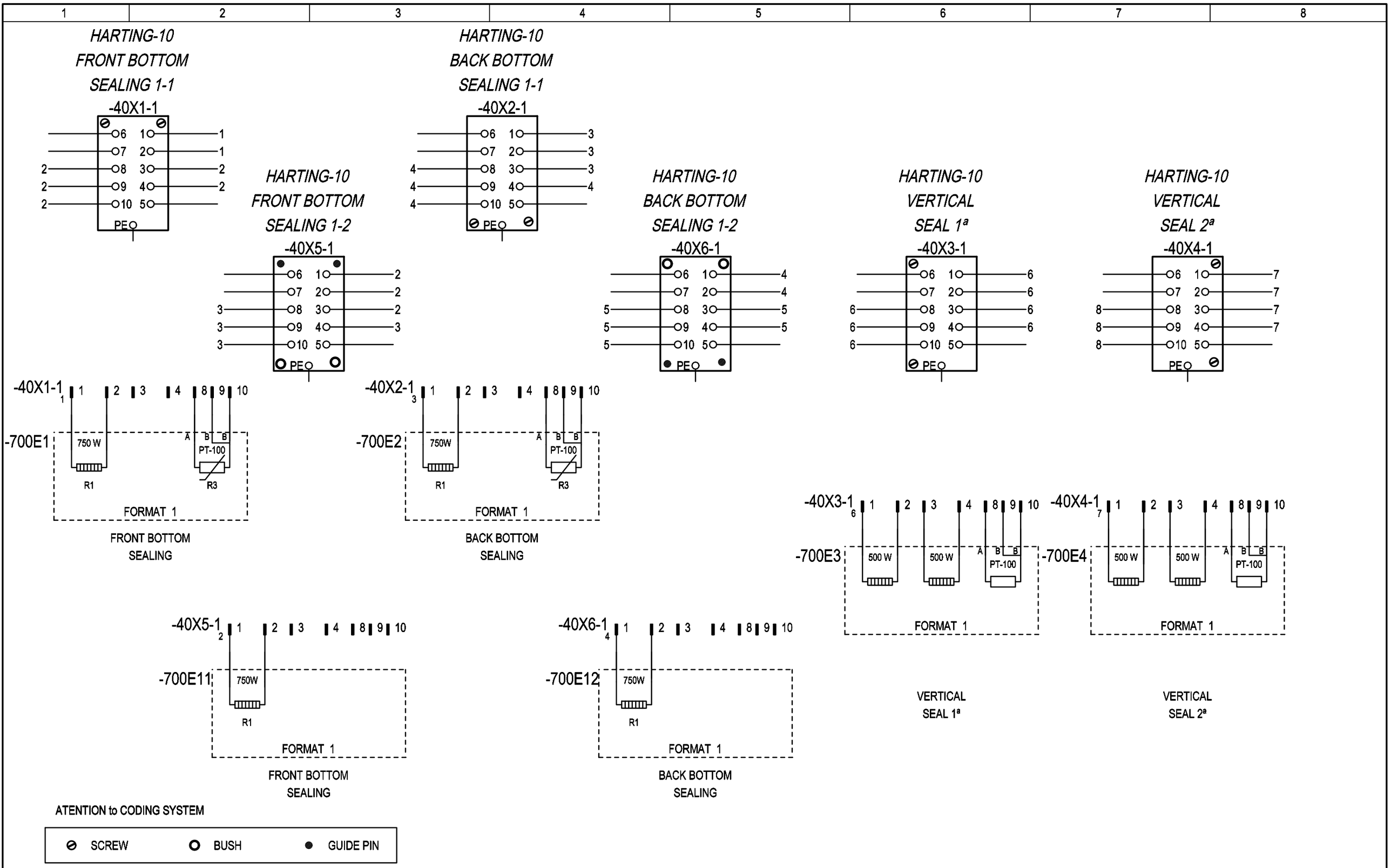

ATENTION to CODING SYSTEM

⊘ SCREW	O BUSH	● GUIDE PIN

3				Date	\Z72	NURTURE, INC. (USA)	ACMAVOLPAK	TYPE OF MACHINE: SM-360 F4 WD	FORMAT 1	=
2				Draw.	A.LLEONART			PROJECT Nº: 24981A		+
1	DIN			Print.	22.07.2014					Sheet 700
	Modification	Date	Name	Norm	DIN	Nº ORDER 13.025		\Z69		Next 701

PATH: 24981A/Diagrams/05-Formats/700

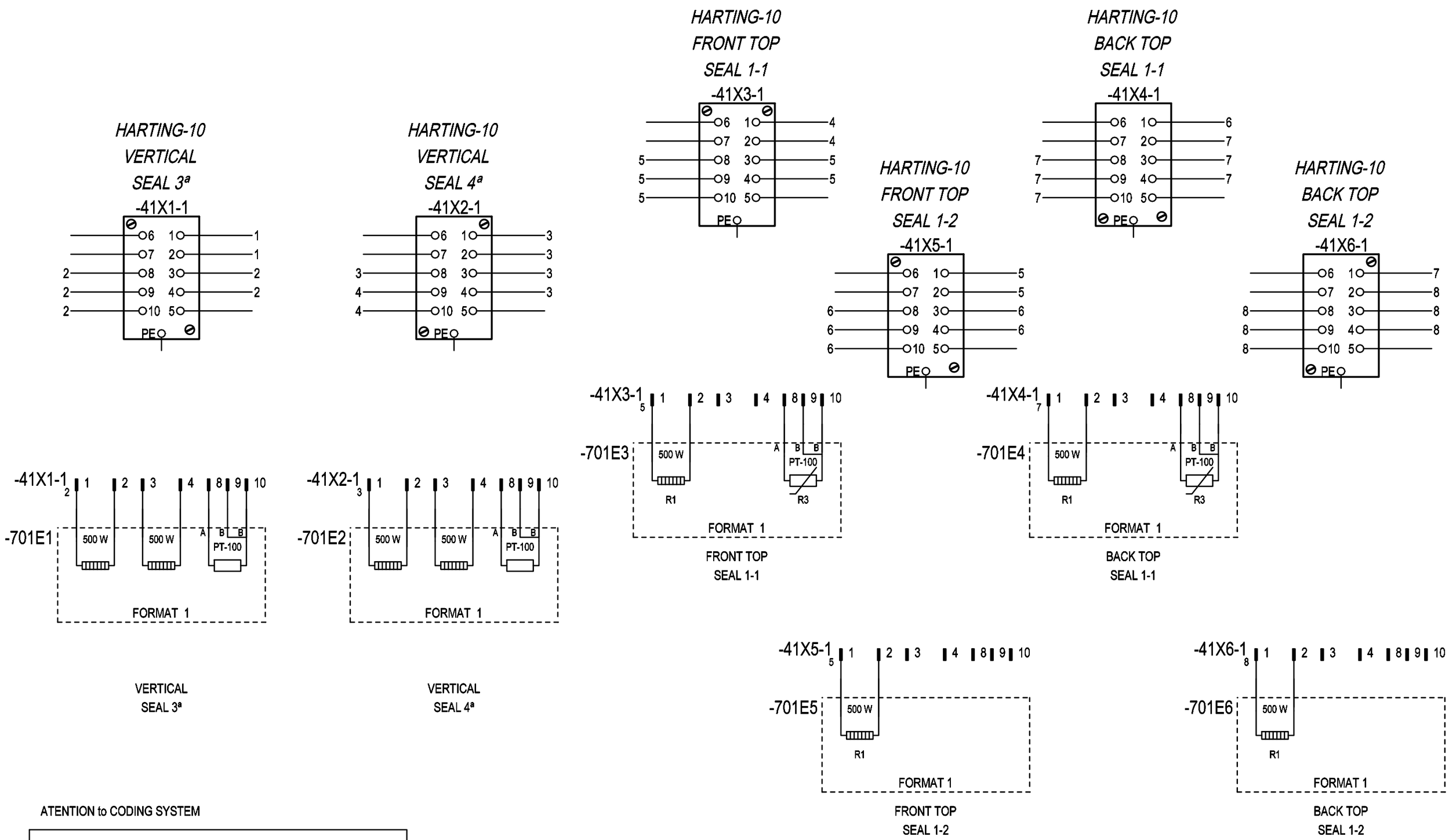

ATENTION to CODING SYSTEM

⊘ SCREW	O BUSH	● GUIDE PIN

3				Date	\Z72	NURTURE, INC. (USA)	ACMAVOLPAK	TYPE OF MACHINE: SM-360 F4 WD	FORMAT 1	=
2				Draw.	A.LLEONART			PROJECT Nº: 24981A		+
1	DIN			Print.	22.07.2014					Sheet 701
	Modification	Date	Name	Norm	DIN	Nº ORDER 13.025		\Z69		Next 702

PATH: 24981A/Diagrams/05-Formats/701

1	2	3	4	5	6	7	8

HARTING-10
VERTICAL
SEAL 5ª
-42X1-1

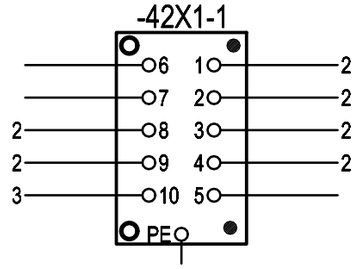

HARTING-10
VERTICAL
SEAL 6ª
-42X2-1

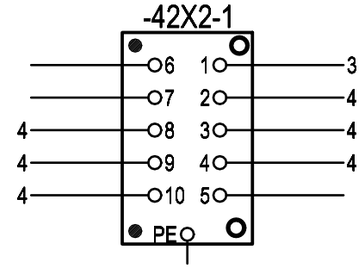

HARTING-10
VERTICAL
SEAL 7ª
-42X3-1

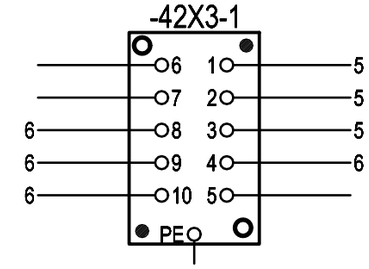

HARTING-10
VERTICAL
SEAL 8ª
-42X4-1

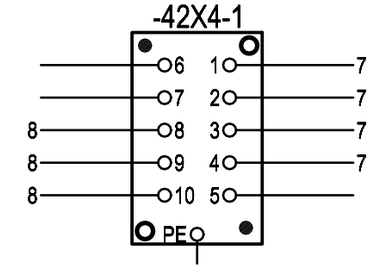

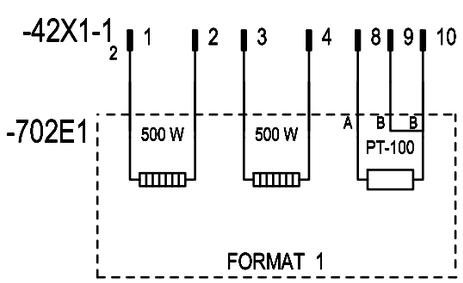

VERTICAL
SEAL 5ª

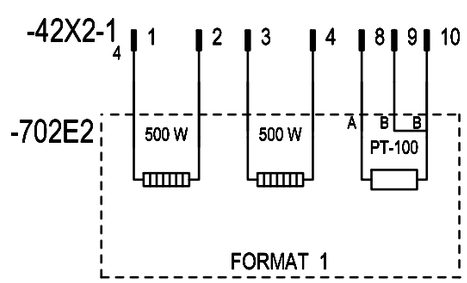

VERTICAL
SEAL 6ª

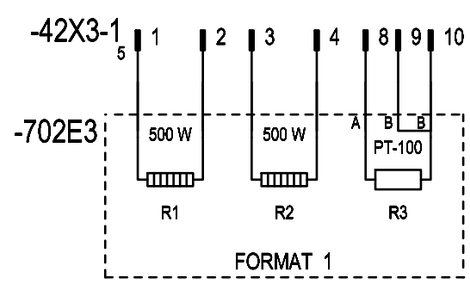

VERTICAL
SEAL 7ª

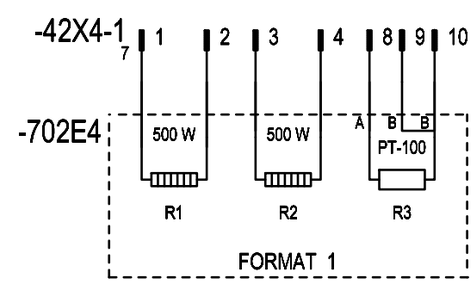

VERTICAL
SEAL 8ª

ATENTION to CODING SYSTEM

⊘ SCREW	○ BUSH	● GUIDE PIN

3				Date	\Z72	NURTURE, INC. (USA)	ACMAVOLPAK	TYPE OF MACHINE: SM-360 F4 WD	FORMAT 1	=
2				Draw.	A.LLEONART			PROJECT Nº: 24981A		+
1	DIN			Print.	22.07.2014					Sheet 702
	Modification	Date	Name	Norm	DIN	Nº ORDER 13.025		\Z69		Next 703

PATH: 24981A/Diagrams/05-Formats/702

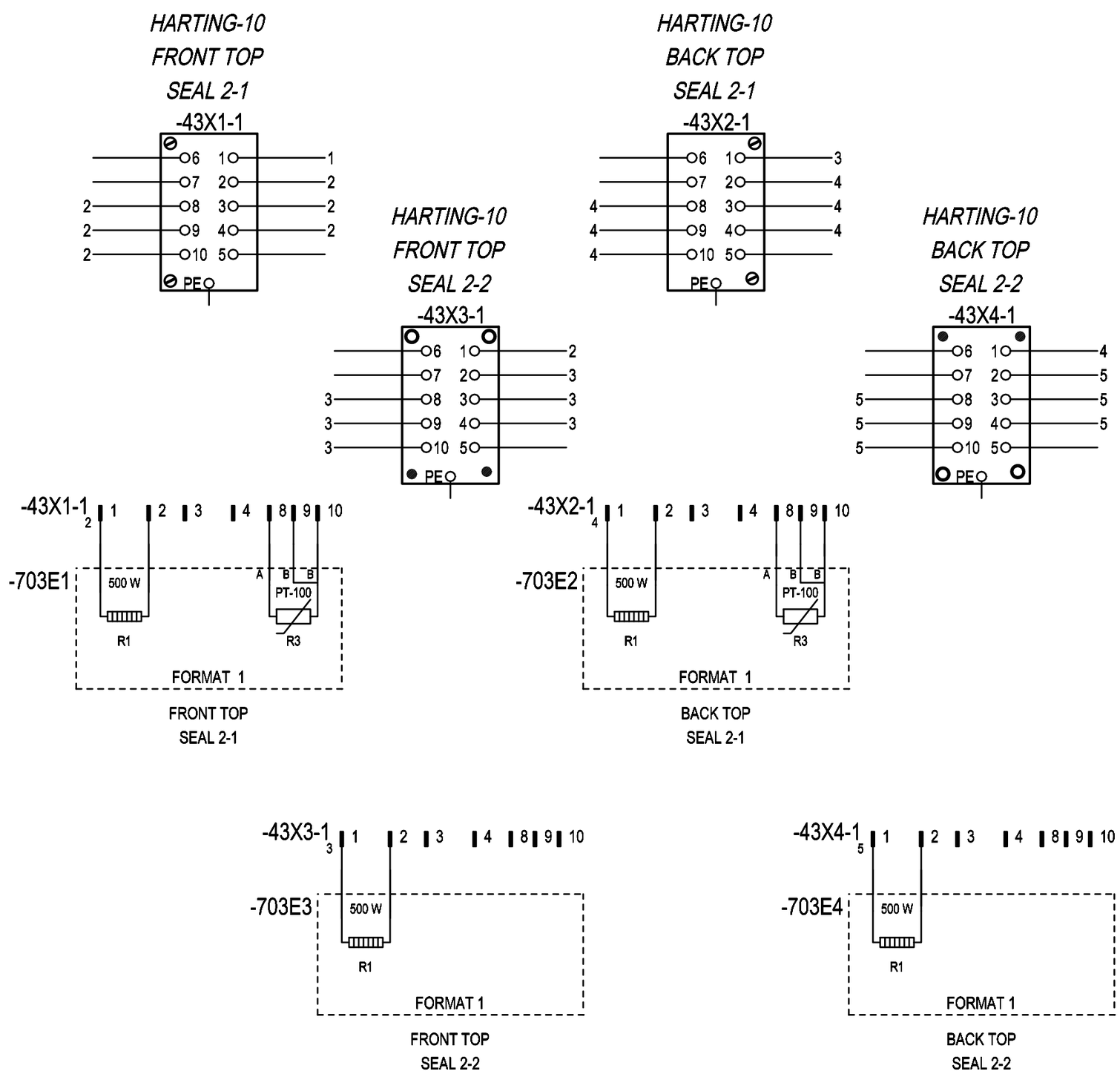

ATENTION to CODING SYSTEM

⊘ SCREW	O BUSH	● GUIDE PIN

3				Date	\Z72	NURTURE, INC. (USA)	ACMAVOLPAK	TYPE OF MACHINE: SM-360 F4 WD	FORMAT 1	=
2				Draw.	A.LLEONART			PROJECT Nº: 24981A		+
1	DIN			Print.	22.07.2014					Sheet 703
	Modification	Date	Name	Norm	DIN	Nº ORDER 13.025		\Z69		Next 706

PATH: 24981A/Diagrams/05-Formats/703

1	2	3	4	5	6	7	8

HARTING-10
FRONT CAP 1
POINT
-46X1-1

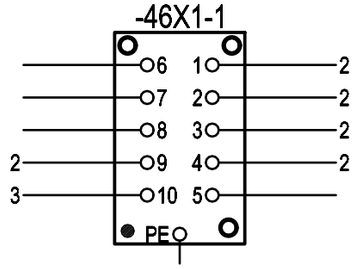

HARTING-10
BACK CAP 1
SEAL
-46X2-1

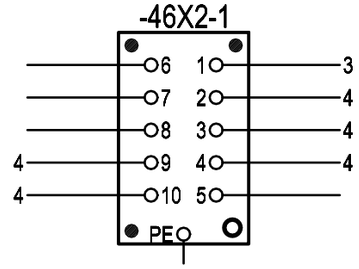

HARTING-10
FRONT CAP 2
SEAL POINT
-46X3-1

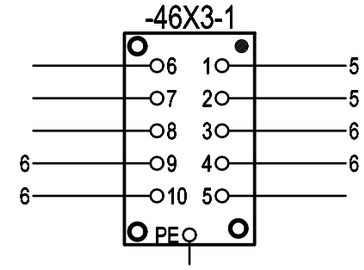

HARTING-10
BACK CAP 2
SEAL POINT
-46X4-1

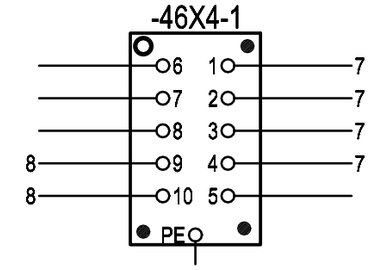

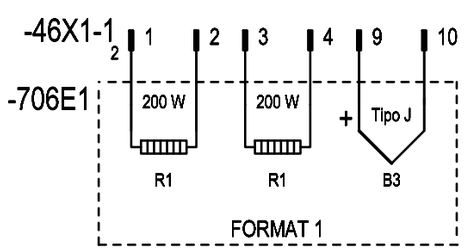

FRONT CAP 1
POINT

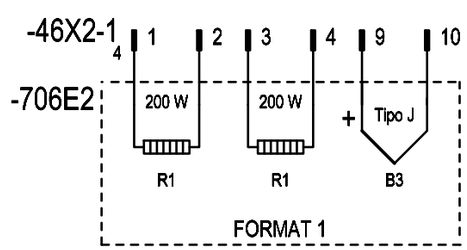

BACK CAP 1
SEAL

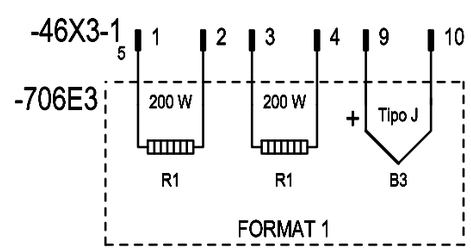

FRONT CAP 2
SEAL POINT

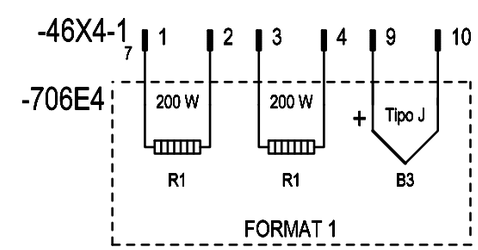

BACK CAP 2
SEAL POINT

3				Date	\Z72	NURTURE, INC. (USA)	ACMAVOLPAK	TYPE OF MACHINE: SM-360 F4 WD	FORMAT 1	=
2				Draw.	A.LLEONART			PROJECT Nº: 24981A		+
1	DIN			Print.	22.07.2014					Sheet 706
	Modification	Date	Name	Norm	DIN	Nº ORDER 13.025		\Z69		Next 707

PATH: 24981A/Diagrams/05-Formats/706

1	2	3	4	5	6	7	8

HARTING-10
FRONT CAP 3
POINT
-47X1-1

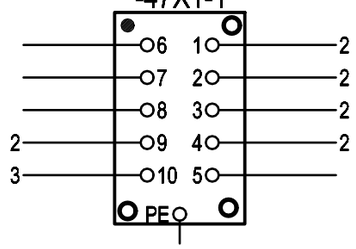

HARTING-10
BACK CAP 3
SEAL
-47X2-1

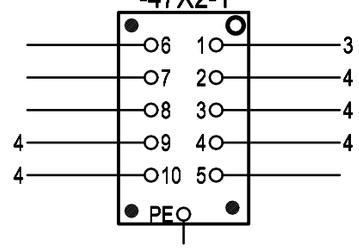

HARTING-10
FRONT CAP 4
POINT
-47X3-1

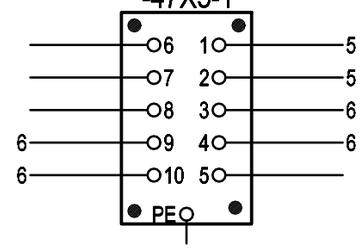

HARTING-10
BACK CAP 4
SEAL
-47X4-1

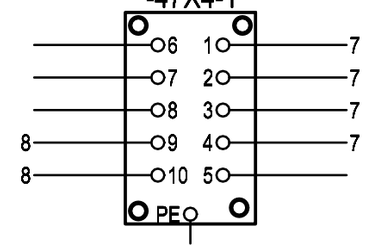

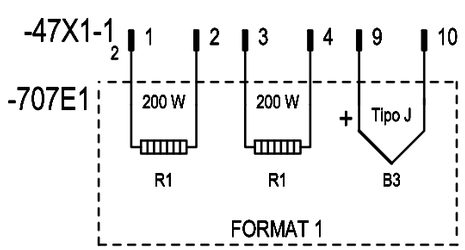

FRONT CAP 3
POINT

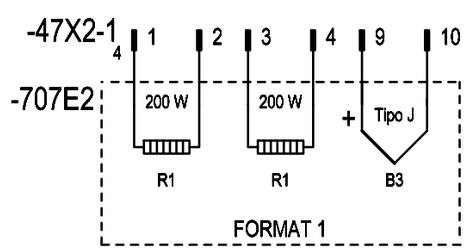

BACK CAP 3
SEAL

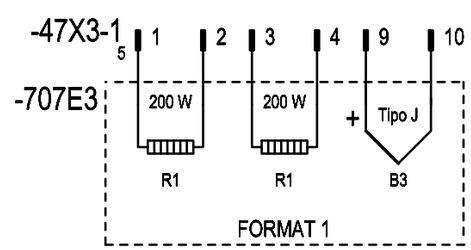

FRONT CAP 4
POINT

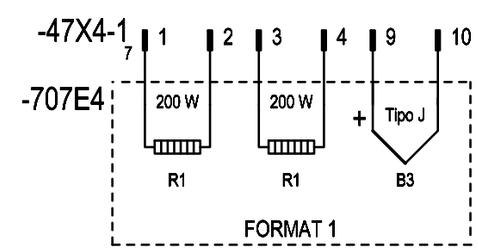

BACK CAP 4
SEAL

3				Date	\Z72	NURTURE, INC. (USA)	ACMAVOLPAK	TYPE OF MACHINE: SM-360 F4 WD	FORMAT 1	=
2				Draw.	A.LLEONART			PROJECT Nº: 24981A		+
1	DIN			Print.	22.07.2014					Sheet 707
	Modification	Date	Name	Norm	DIN	Nº ORDER 13.025		\Z69		Next

PATH: 24981A/Diagrams/05-Formats/707

POSITION	QUANTITY	CODE	PART DESIGN	MANUFACTURER	MANUFACTURER REFERENCE
-19X1	1	4.03.11.098.001	HOOD 6p M25 Side "T-Type"	ILME	TMAO 06 L25
-19X1	1	4.03.11.098.005	HOUSING 6p "T-Type"	ILME	TCHI 06 L
-19X1	1	4.03.11.098.011	MALE CONECTOR 6p. CSH	ILME	CSHM 06
-19X1	1	4.03.11.098.015	FEMALE CONECTOR 6p. CSH	ILME	CSHF 06
-19X2	1	4.03.11.098.001	HOOD 6p M25 Side "T-Type"	ILME	TMAO 06 L25
-19X2	1	4.03.11.098.005	HOUSING 6p "T-Type"	ILME	TCHI 06 L
-19X2	1	4.03.11.098.011	MALE CONECTOR 6p. CSH	ILME	CSHM 06
-19X2	1	4.03.11.098.015	FEMALE CONECTOR 6p. CSH	ILME	CSHF 06
-400EV1	1	4.22.03.011.008	FAN CABINET (148mm)	RITTAL	SK 3238.100 (SK 3322.107)
-400EV1	1	4.22.03.011.009	FAN FILTER CABINET (148mm)	RITTAL	SK 3238.200 (SK 3322.207)
-400EV1	1	4.22.03.011.012	COVER AGAINST WATER	RITTAL	SK 3238.080 (SK 3322.800)
-400EV1	1	4.22.03.011.012	COVER AGAINST WATER	RITTAL	SK 3238.080 (SK 3322.800)
-400F1	1	4.16.03.246.001	FUSE BLOCK II (UL)	GOULD	USBCC2I (Old USCC21)
-400F1	2	4.06.02.246.027	FUSE 6A (retard) (UL)	GOULD	ATQR6
-400F2	1	4.09.05.007.064	CIRCUIT BREAKER I 16A "UL"	SCHNEIDER	MG 24508
-400T1	1	4.20.04.310.031	THREE/MONO TRANS.1,5kVA/60Hz UL	METH	T1ULF Single phase 1,5KvA 60Hz Pri:480V Sec: 120/240V
-400X01	1	4.02.04.043.066	TERMINAL BLOCK 35/6mm	WEIDMULLER	WPDB 35-16/6 3/4 Ref.1939450000
-400X02	1	4.02.04.043.066	TERMINAL BLOCK 35/6mm	WEIDMULLER	WPDB 35-16/6 3/4 Ref.1939450000
-400X03	1	4.02.04.043.066	TERMINAL BLOCK 35/6mm	WEIDMULLER	WPDB 35-16/6 3/4 Ref.1939450000
-401Q1	1	4.09.04.005.051	MANUAL MOTOR PROTE. (0,16-0,25A)	SCHNEIDER	GV2-ME023
-401Q1	1	4.09.04.005.056	CONTACT MANUAL MOTOR PROTECTOR	SCHNEIDER	GV-AN113 (GV2 AN11)
-401Q2	1	4.09.04.005.046	MANUAL MOTOR PROTEC. (0,63-1A)	SCHNEIDER	GV2-ME053
-401Q2	1	4.09.04.005.056	CONTACT MANUAL MOTOR PROTECTOR	SCHNEIDER	GV-AN113 (GV2 AN11)
-401Q3	1	4.09.04.005.046	MANUAL MOTOR PROTEC. (0,63-1A)	SCHNEIDER	GV2-ME053
-401Q3	1	4.09.04.005.056	CONTACT MANUAL MOTOR PROTECTOR	SCHNEIDER	GV-AN113 (GV2 AN11)
-401Q10	1	4.09.02.017.019	MAIN SWITCH 25A (Back Cabinet)	ALLEN BRADLEY	194E-A25-1753
-401Q10	1	4.09.02.017.021	SWITCH BOX (194E-A)	ALLEN BRADLEY	194L-G3572
-401Q10	1	4.09.02.017.020	AUX.CONTACT NO+NC (194E-A)	ALLEN BRADLEY	194E-AP11
-401Q10	1	4.09.02.017.022	GROUND FOR SWITCH BOX (194E-A)	ALLEN BRADLEY	194E-G3653
-401Q10	1	4.09.02.017.023	ACCESSORY SAFETY SWITCH	ALLEN BRADLEY	194L-HE6G-175

POSITION	QUANTITY	CODE	PART DESIGN	MANUFACTURER	MANUFACTURER REFERENCE
-401X1	1	4.03.11.098.001	HOOD 6p M25 Side "T-Type"	ILME	TMAO 06 L25
-401X1	1	4.03.11.098.005	HOUSING 6p "T-Type"	ILME	TCHI 06 L
-401X1	1	4.03.11.098.011	MALE CONECTOR 6p. CSH	ILME	CSHM 06
-401X1	1	4.03.11.098.015	FEMALE CONECTOR 6p. CSH	ILME	CSHF 06
-401X2	1	4.03.11.098.001	HOOD 6p M25 Side "T-Type"	ILME	TMAO 06 L25
-401X2	1	4.03.11.098.005	HOUSING 6p "T-Type"	ILME	TCHI 06 L
-401X2	1	4.03.11.098.011	MALE CONECTOR 6p. CSH	ILME	CSHM 06
-401X2	1	4.03.11.098.015	FEMALE CONECTOR 6p. CSH	ILME	CSHF 06
-401X3	1	4.03.11.098.001	HOOD 6p M25 Side "T-Type"	ILME	TMAO 06 L25
-401X3	1	4.03.11.098.005	HOUSING 6p "T-Type"	ILME	TCHI 06 L
-401X3	1	4.03.11.098.011	MALE CONECTOR 6p. CSH	ILME	CSHM 06
-401X3	1	4.03.11.098.015	FEMALE CONECTOR 6p. CSH	ILME	CSHF 06
-402Q1	1	4.09.04.005.051	MANUAL MOTOR PROTE. (0,16-0,25A)	SCHNEIDER	GV2-ME023
-402Q1	1	4.09.04.005.056	CONTACT MANUAL MOTOR PROTECTOR	SCHNEIDER	GV-AN113 (GV2 AN11)
-402Q2	1	4.09.04.005.046	MANUAL MOTOR PROTEC. (0,63-1A)	SCHNEIDER	GV2-ME053
-402Q2	1	4.09.04.005.056	CONTACT MANUAL MOTOR PROTECTOR	SCHNEIDER	GV-AN113 (GV2 AN11)
-402Q3	1	4.09.04.005.046	MANUAL MOTOR PROTEC. (0,63-1A)	SCHNEIDER	GV2-ME053
-402Q3	1	4.09.04.005.056	CONTACT MANUAL MOTOR PROTECTOR	SCHNEIDER	GV-AN113 (GV2 AN11)
-402Q10	1	4.09.02.017.019	MAIN SWITCH 25A (Back Cabinet)	ALLEN BRADLEY	194E-A25-1753
-402Q10	1	4.09.02.017.021	SWITCH BOX (194E-A)	ALLEN BRADLEY	194L-G3572
-402Q10	1	4.09.02.017.020	AUX.CONTACT NO+NC (194E-A)	ALLEN BRADLEY	194E-AP11
-402Q10	1	4.09.02.017.022	GROUND FOR SWITCH BOX (194E-A)	ALLEN BRADLEY	194E-G3653
-402Q10	1	4.09.02.017.023	ACCESSORY SAFETY SWITCH	ALLEN BRADLEY	194L-HE6G-175
-402X1	1	4.03.11.098.001	HOOD 6p M25 Side "T-Type"	ILME	TMAO 06 L25
-402X1	1	4.03.11.098.005	HOUSING 6p "T-Type"	ILME	TCHI 06 L
-402X1	1	4.03.11.098.011	MALE CONECTOR 6p. CSH	ILME	CSHM 06
-402X1	1	4.03.11.098.015	FEMALE CONECTOR 6p. CSH	ILME	CSHF 06
-402X2	1	4.03.11.098.001	HOOD 6p M25 Side "T-Type"	ILME	TMAO 06 L25
-402X2	1	4.03.11.098.005	HOUSING 6p "T-Type"	ILME	TCHI 06 L
-402X2	1	4.03.11.098.011	MALE CONECTOR 6p. CSH	ILME	CSHM 06

POSITION	QUANTITY	CODE	PART DESIGN	MANUFACTURER	MANUFACTURER REFERENCE
-402X2	1	4.03.11.098.015	FEMALE CONECTOR 6p. CSH	ILME	CSHF 06
-402X3	1	4.03.11.098.001	HOOD 6p M25 Side "T-Type"	ILME	TMAO 06 L25
-402X3	1	4.03.11.098.005	HOUSING 6p "T-Type"	ILME	TCHI 06 L
-402X3	1	4.03.11.098.011	MALE CONECTOR 6p. CSH	ILME	CSHM 06
-402X3	1	4.03.11.098.015	FEMALE CONECTOR 6p. CSH	ILME	CSHF 06
-403Q1	1	4.09.04.005.051	MANUAL MOTOR PROTE. (0,16-0,25A)	SCHNEIDER	GV2-ME023
-403Q1	1	4.09.04.005.056	CONTACT MANUAL MOTOR PROTECTOR	SCHNEIDER	GV-AN113 (GV2 AN11)
-403Q2	1	4.09.04.005.046	MANUAL MOTOR PROTEC. (0,63-1A)	SCHNEIDER	GV2-ME053
-403Q2	1	4.09.04.005.056	CONTACT MANUAL MOTOR PROTECTOR	SCHNEIDER	GV-AN113 (GV2 AN11)
-403Q10	1	4.09.02.017.019	MAIN SWITCH 25A (Back Cabinet)	ALLEN BRADLEY	194E-A25-1753
-403Q10	1	4.09.02.017.021	SWITCH BOX (194E-A)	ALLEN BRADLEY	194L-G3572
-403Q10	1	4.09.02.017.020	AUX.CONTACT NO+NC (194E-A)	ALLEN BRADLEY	194E-AP11
-403Q10	1	4.09.02.017.022	GROUND FOR SWITCH BOX (194E-A)	ALLEN BRADLEY	194E-G3653
-403Q10	1	4.09.02.017.023	ACCESSORY SAFETY SWITCH	ALLEN BRADLEY	194L-HE6G-175
-403X1	1	4.03.11.098.001	HOOD 6p M25 Side "T-Type"	ILME	TMAO 06 L25
-403X1	1	4.03.11.098.005	HOUSING 6p "T-Type"	ILME	TCHI 06 L
-403X1	1	4.03.11.098.011	MALE CONECTOR 6p. CSH	ILME	CSHM 06
-403X1	1	4.03.11.098.015	FEMALE CONECTOR 6p. CSH	ILME	CSHF 06
-403X2	1	4.03.11.098.001	HOOD 6p M25 Side "T-Type"	ILME	TMAO 06 L25
-403X2	1	4.03.11.098.005	HOUSING 6p "T-Type"	ILME	TCHI 06 L
-403X2	1	4.03.11.098.011	MALE CONECTOR 6p. CSH	ILME	CSHM 06
-403X2	1	4.03.11.098.015	FEMALE CONECTOR 6p. CSH	ILME	CSHF 06
-404Q1	1	4.09.04.005.051	MANUAL MOTOR PROTE. (0,16-0,25A)	SCHNEIDER	GV2-ME023
-404Q1	1	4.09.04.005.056	CONTACT MANUAL MOTOR PROTECTOR	SCHNEIDER	GV-AN113 (GV2 AN11)
-404Q2	1	4.09.04.005.046	MANUAL MOTOR PROTEC. (0,63-1A)	SCHNEIDER	GV2-ME053
-404Q2	1	4.09.04.005.056	CONTACT MANUAL MOTOR PROTECTOR	SCHNEIDER	GV-AN113 (GV2 AN11)
-404Q10	1	4.09.02.017.019	MAIN SWITCH 25A (Back Cabinet)	ALLEN BRADLEY	194E-A25-1753
-404Q10	1	4.09.02.017.021	SWITCH BOX (194E-A)	ALLEN BRADLEY	194L-G3572
-404Q10	1	4.09.02.017.020	AUX.CONTACT NO+NC (194E-A)	ALLEN BRADLEY	194E-AP11
-404Q10	1	4.09.02.017.022	GROUND FOR SWITCH BOX (194E-A)	ALLEN BRADLEY	194E-G3653

POSITION	QUANTITY	CODE	PART DESIGN	MANUFACTURER	MANUFACTURER REFERENCE
-404Q10	1	4.09.02.017.023	ACCESSORY SAFETY SWITCH	ALLEN BRADLEY	194L-HE6G-175
-404X1	1	4.03.11.098.001	HOOD 6p M25 Side "T-Type"	ILME	TMAO 06 L25
-404X1	1	4.03.11.098.005	HOUSING 6p "T-Type"	ILME	TCHI 06 L
-404X1	1	4.03.11.098.011	MALE CONECTOR 6p. CSH	ILME	CSHM 06
-404X1	1	4.03.11.098.015	FEMALE CONECTOR 6p. CSH	ILME	CSHF 06
-404X2	1	4.03.11.098.001	HOOD 6p M25 Side "T-Type"	ILME	TMAO 06 L25
-404X2	1	4.03.11.098.005	HOUSING 6p "T-Type"	ILME	TCHI 06 L
-404X2	1	4.03.11.098.011	MALE CONECTOR 6p. CSH	ILME	CSHM 06
-404X2	1	4.03.11.098.015	FEMALE CONECTOR 6p. CSH	ILME	CSHF 06
-405X1	1	4.03.11.012.227	MALE CONNECTOR HAN-A4 (Black)	HARTING	09 20 004 2633
-405X1	1	4.03.11.012.228	FEMALE CONNECTOR HAN-A4	HARTING	09 20 004 2733
-405X1	1	4.03.11.012.125	CONNECTOR COVER 7 poles M20 Side	HARTING	19 20 003 0620
-405X1	1	4.03.11.012.055	CONNECTOR SOCKET (PVC)	HARTING	09 20 003 0320
-405X2	1	4.03.11.012.227	MALE CONNECTOR HAN-A4 (Black)	HARTING	09 20 004 2633
-405X2	1	4.03.11.012.228	FEMALE CONNECTOR HAN-A4	HARTING	09 20 004 2733
-405X2	1	4.03.11.012.125	CONNECTOR COVER 7 poles M20 Side	HARTING	19 20 003 0620
-405X2	1	4.03.11.012.055	CONNECTOR SOCKET (PVC)	HARTING	09 20 003 0320
-406X1	1	4.03.11.012.227	MALE CONNECTOR HAN-A4 (Black)	HARTING	09 20 004 2633
-406X1	1	4.03.11.012.228	FEMALE CONNECTOR HAN-A4	HARTING	09 20 004 2733
-406X1	1	4.03.11.012.125	CONNECTOR COVER 7 poles M20 Side	HARTING	19 20 003 0620
-406X1	1	4.03.11.012.055	CONNECTOR SOCKET (PVC)	HARTING	09 20 003 0320
-406X2	1	4.03.11.012.227	MALE CONNECTOR HAN-A4 (Black)	HARTING	09 20 004 2633
-406X2	1	4.03.11.012.228	FEMALE CONNECTOR HAN-A4	HARTING	09 20 004 2733
-406X2	1	4.03.11.012.125	CONNECTOR COVER 7 poles M20 Side	HARTING	19 20 003 0620
-406X2	1	4.03.11.012.055	CONNECTOR SOCKET (PVC)	HARTING	09 20 003 0320
-409A1	1	4.01.02.001.165	DEVICENET INTERFACE UNIT	OMRON	GRT1-DRT
-409A1	1	4.01.02.001.169	END OF BUS SMARTSLICE	OMRON	GRT1-END
-409R2	1	4.18.04.085.010	RESISTANCE 120 Ohm	RADIO SONDA	120 Ohm 1/4w
-410A1	1	4.01.02.001.167	REMOTE INPUT SMARTSLICE	OMRON	GRT1-ID8-1 (PNP)
-410X0	1	4.03.11.012.231	MALE CONNECTOR HAN-8D	HARTING	09 36 008 2632

POSITION	QUANTITY	CODE	PART DESIGN	MANUFACTURER	MANUFACTURER REFERENCE
-410X0	1	4.03.11.012.232	FEMALE CONNECTOR HAN-8D	HARTING	09 36 008 2732
-410X0	1	4.03.11.012.125	CONNECTOR COVER 7 poles M20 Side	HARTING	19 20 003 0620
-410X0	1	4.03.11.012.055	CONNECTOR SOCKET (PVC)	HARTING	09 20 003 0320
-410X7	1	4.03.11.012.227	MALE CONNECTOR HAN-A4 (Black)	HARTING	09 20 004 2633
-410X7	1	4.03.11.012.228	FEMALE CONNECTOR HAN-A4	HARTING	09 20 004 2733
-410X7	1	4.03.11.012.125	CONNECTOR COVER 7 poles M20 Side	HARTING	19 20 003 0620
-410X7	1	4.03.11.012.055	CONNECTOR SOCKET (PVC)	HARTING	09 20 003 0320
-411A1	1	4.01.02.001.167	REMOTE INPUT SMARTSLICE	OMRON	GRT1-ID8-1 (PNP)
-411X0	1	4.03.11.012.231	MALE CONNECTOR HAN-8D	HARTING	09 36 008 2632
-411X0	1	4.03.11.012.232	FEMALE CONNECTOR HAN-8D	HARTING	09 36 008 2732
-411X0	1	4.03.11.012.125	CONNECTOR COVER 7 poles M20 Side	HARTING	19 20 003 0620
-411X0	1	4.03.11.012.055	CONNECTOR SOCKET (PVC)	HARTING	09 20 003 0320
-411X7	1	4.03.11.012.227	MALE CONNECTOR HAN-A4 (Black)	HARTING	09 20 004 2633
-411X7	1	4.03.11.012.228	FEMALE CONNECTOR HAN-A4	HARTING	09 20 004 2733
-411X7	1	4.03.11.012.125	CONNECTOR COVER 7 poles M20 Side	HARTING	19 20 003 0620
-411X7	1	4.03.11.012.055	CONNECTOR SOCKET (PVC)	HARTING	09 20 003 0320
-412A1	1	4.01.02.001.167	REMOTE INPUT SMARTSLICE	OMRON	GRT1-ID8-1 (PNP)
-412B1	1	4.06.03.295.009	PHOTOCELL IN "U" 80mm	DATASENSOR	SRF80-5-P
-412B1	1	4.03.11.119.103	CONNECTOR M8 3p.90‖ 5mts.	MURRELEKTRONIK	7014-08081-2100500
-412S7	1	4.19.01.005.021	SELECTOR sWITCH 2pos. Style 4	SCHNEIDER	ZB4 BD2
-412S7	1	4.03.02.005.021	CONTACT BLOCK (NO) Style 4	SCHNEIDER	ZB4 BZ101
-412S7	1	4.05.04.005.002	LABEL SUPPORT 30x50mm	SCHNEIDER	ZBZ-33
-412X0	1	4.03.11.012.231	MALE CONNECTOR HAN-8D	HARTING	09 36 008 2632
-412X0	1	4.03.11.012.232	FEMALE CONNECTOR HAN-8D	HARTING	09 36 008 2732
-412X0	1	4.03.11.012.125	CONNECTOR COVER 7 poles M20 Side	HARTING	19 20 003 0620
-412X0	1	4.03.11.012.055	CONNECTOR SOCKET (PVC)	HARTING	09 20 003 0320
-413A1	1	4.01.02.001.167	REMOTE INPUT SMARTSLICE	OMRON	GRT1-ID8-1 (PNP)
-413B1	1	4.06.03.295.009	PHOTOCELL IN "U" 80mm	DATASENSOR	SRF80-5-P
-413B1	1	4.03.11.119.103	CONNECTOR M8 3p.90‖ 5mts.	MURRELEKTRONIK	7014-08081-2100500
-413S7	1	4.19.01.005.021	SELECTOR sWITCH 2pos. Style 4	SCHNEIDER	ZB4 BD2

POSITION	QUANTITY	CODE	PART DESIGN	MANUFACTURER	MANUFACTURER REFERENCE
-413S7	1	4.03.02.005.021	CONTACT BLOCK (NO) Style 4	SCHNEIDER	ZB4 BZ101
-413S7	1	4.05.04.005.002	LABEL SUPPORT 30x50mm	SCHNEIDER	ZBZ-33
-413X0	1	4.03.11.012.231	MALE CONNECTOR HAN-8D	HARTING	09 36 008 2632
-413X0	1	4.03.11.012.232	FEMALE CONNECTOR HAN-8D	HARTING	09 36 008 2732
-413X0	1	4.03.11.012.125	CONNECTOR COVER 7 poles M20 Side	HARTING	19 20 003 0620
-413X0	1	4.03.11.012.055	CONNECTOR SOCKET (PVC)	HARTING	09 20 003 0320
-414A1	1	4.01.02.001.168	REMOTE OUTPUT SMARTSLICE	OMRON	GRT1-OD8-1 (PNP)
-414K0	1	4.18.02.001.014	AUX.RELAY 24VDC (2 cont.)	OMRON	MY2 IN1-D2 24VD (S)
-414K0	1	4.02.01.001.005	SOCKET RELAY PYF 08S (CLAMP)	OMRON	PYF 08S BYOMZ
-414K1	1	4.18.02.001.014	AUX.RELAY 24VDC (2 cont.)	OMRON	MY2 IN1-D2 24VD (S)
-414K1	1	4.02.01.001.005	SOCKET RELAY PYF 08S (CLAMP)	OMRON	PYF 08S BYOMZ
-414K2	1	4.18.02.001.014	AUX.RELAY 24VDC (2 cont.)	OMRON	MY2 IN1-D2 24VD (S)
-414K2	1	4.02.01.001.005	SOCKET RELAY PYF 08S (CLAMP)	OMRON	PYF 08S BYOMZ
-414K3	1	4.18.02.001.014	AUX.RELAY 24VDC (2 cont.)	OMRON	MY2 IN1-D2 24VD (S)
-414K3	1	4.02.01.001.005	SOCKET RELAY PYF 08S (CLAMP)	OMRON	PYF 08S BYOMZ
-414K4	1	4.03.06.005.038	INV.CONTACTOR(12A)24VDC TeSys	SCHNEIDER	LC2-D123-BL
-414K6	1	4.03.06.005.038	INV.CONTACTOR(12A)24VDC TeSys	SCHNEIDER	LC2-D123-BL
-414K14	1	4.18.02.043.003	RELAY 24VDC (1CO_6A/250V)	WEIDMULLER	8553660000 MRZ 24VDC 1CO
-414K15	1	4.18.02.043.003	RELAY 24VDC (1CO_6A/250V)	WEIDMULLER	8553660000 MRZ 24VDC 1CO
-414K16	1	4.18.02.043.003	RELAY 24VDC (1CO_6A/250V)	WEIDMULLER	8553660000 MRZ 24VDC 1CO
-414K17	1	4.18.02.043.003	RELAY 24VDC (1CO_6A/250V)	WEIDMULLER	8553660000 MRZ 24VDC 1CO
-415K0	1	4.03.06.005.037	STARTER CONTACTOR 24VDC (12A)TeS	SCHNEIDER	LC1-D123-BL
-415K1	1	4.03.06.005.037	STARTER CONTACTOR 24VDC (12A)TeS	SCHNEIDER	LC1-D123-BL
-415K3	1	4.03.06.005.037	STARTER CONTACTOR 24VDC (12A)TeS	SCHNEIDER	LC1-D123-BL
-415K4	1	4.03.06.005.037	STARTER CONTACTOR 24VDC (12A)TeS	SCHNEIDER	LC1-D123-BL
-415K6	1	4.03.06.005.038	INV.CONTACTOR(12A)24VDC TeSys	SCHNEIDER	LC2-D123-BL
-416A1	1	4.01.02.001.168	REMOTE OUTPUT SMARTSLICE	OMRON	GRT1-OD8-1 (PNP)
-416K0	1	4.03.06.005.037	STARTER CONTACTOR 24VDC (12A)TeS	SCHNEIDER	LC1-D123-BL
-416K3	1	4.03.06.005.037	STARTER CONTACTOR 24VDC (12A)TeS	SCHNEIDER	LC1-D123-BL
-416K6	1	4.03.06.005.038	INV.CONTACTOR(12A)24VDC TeSys	SCHNEIDER	LC2-D123-BL

POSITION	QUANTITY	CODE	PART DESIGN	MANUFACTURER	MANUFACTURER REFERENCE
-416K10	1	4.18.02.043.003	RELAY 24VDC (1CO_6A/250V)	WEIDMULLER	8553660000 MRZ 24VDC 1CO
-416K13	1	4.18.02.043.003	RELAY 24VDC (1CO_6A/250V)	WEIDMULLER	8553660000 MRZ 24VDC 1CO
-416K16	1	4.18.02.043.003	RELAY 24VDC (1CO_6A/250V)	WEIDMULLER	8553660000 MRZ 24VDC 1CO
-416K17	1	4.18.02.043.003	RELAY 24VDC (1CO_6A/250V)	WEIDMULLER	8553660000 MRZ 24VDC 1CO
-1F1	1	4.16.03.246.007	FUSE BLOCK III (60A)	GOULD	US6J3I
-1F1	3	4.06.02.246.021	FUSE 60A (class J) (UL)	GOULD	AJT60
-1F2	1	4.16.03.246.001	FUSE BLOCK II (UL)	GOULD	USBCC2I (Old USCC21)
-1F2	2	4.06.02.246.028	FUSE 12A (retard) (UL)	GOULD	ATQR12
-1F3	1	4.09.05.007.092	CIRCUIT BREAKER I 4A (D) UL	SCHNEIDER	MG 24503
-1F4	1	4.09.05.007.092	CIRCUIT BREAKER I 4A (D) UL	SCHNEIDER	MG 24503
-1F6	1	4.16.03.246.002	FUSE BLOCK III (UL)	GOULD	USCC31
-1F6	3	4.06.02.246.035	FUSE 25A (retard) (UL)	GOULD	ATQR25
-1F7	1	4.16.03.246.002	FUSE BLOCK III (UL)	GOULD	USCC31
-1F7	3	4.06.02.246.003	FUSE 15A (retard) (UL)	GOULD	ATQR15
-1F13	1	4.09.05.007.092	CIRCUIT BREAKER I 4A (D) UL	SCHNEIDER	MG 24503
-1F23	1	4.09.05.007.092	CIRCUIT BREAKER I 4A (D) UL	SCHNEIDER	MG 24503
-1G1	1	4.06.04.005.001	POWER SUPPLY 24VDC 10A	SCHNEIDER	ABL8 RPS24100
-1G2	1	4.06.04.005.001	POWER SUPPLY 24VDC 10A	SCHNEIDER	ABL8 RPS24100
-1G3	1	4.06.04.005.001	POWER SUPPLY 24VDC 10A	SCHNEIDER	ABL8 RPS24100
-1H1	1	4.16.01.005.011	WHITE PILOT CONTACT	SCHNEIDER	ZB4 BV013
-1H1	1	4.03.02.005.027	WHITE LED	SCHNEIDER	ZB4 BVB1
-1H1	1	4.05.04.005.002	LABEL SUPPORT 30x50mm	SCHNEIDER	ZBZ-33
-1Q1	1	4.09.02.017.041	INTER.SECC.100A (FOUND PANEL) 3	ALLEN BRADLEY	194E-A100-1753
-1Q1	1	4.09.02.017.038	OPERATION.INT. (GREY)ASSEMBLY PA	ALLEN BRADLEY	194L-HE8G-175
-1Q1	1	4.09.02.017.039	axis 350mm P/SWITCH BOTTOM PANEL	ALLEN BRADLEY	194L-G3394
-1Q10	1	4.09.02.017.042	INTER.SECC.100A (PANEL) 3 POLE	ALLEN BRADLEY	194E-E100-1753
-1Q10	1	4.09.02.017.038	OPERATION.INT. (GREY)ASSEMBLY PA	ALLEN BRADLEY	194L-HE8G-175
-1T1	1	4.20.04.310.016	THREE/MONO TRANS.3kVA/60Hz (UL)	METH	T1ULF Single phase 3KvA 60Hz Pri:480V Sec: 120/240V
-1T2	1	4.20.04.310.027	TRIF.TRANSF.13kVA/60Hz (UL)	METH	T3TUL Three phase 13 KvA 60Hz Pri:480V Sec: 48V
-1T3	1	4.20.04.310.030	THREE/MONO TRANS.8kVA/60Hz (UL)	METH	T3TULF-8KVA (TRIMONO) 8KvA 60Hz Pri:480V Sec: 220V

POSITION	QUANTITY	CODE	PART DESIGN	MANUFACTURER	MANUFACTURER REFERENCE
-1X01	1	4.02.04.043.067	TERMINAL BLOCK 10x2,5mm	WEIDMULLER	WPDB 70/16 1/10 Ref.1939460000
-1X02	1	4.02.04.043.067	TERMINAL BLOCK 10x2,5mm	WEIDMULLER	WPDB 70/16 1/10 Ref.1939460000
-1X03	1	4.02.04.043.067	TERMINAL BLOCK 10x2,5mm	WEIDMULLER	WPDB 70/16 1/10 Ref.1939460000
-1X04	1	4.02.04.043.066	TERMINAL BLOCK 35/6mm	WEIDMULLER	WPDB 35-16/6 3/4 Ref.1939450000
-1X05	1	4.02.04.043.066	TERMINAL BLOCK 35/6mm	WEIDMULLER	WPDB 35-16/6 3/4 Ref.1939450000
-1X06	1	4.02.04.043.066	TERMINAL BLOCK 35/6mm	WEIDMULLER	WPDB 35-16/6 3/4 Ref.1939450000
-1X07	1	4.02.04.043.067	TERMINAL BLOCK 10x2,5mm	WEIDMULLER	WPDB 70/16 1/10 Ref.1939460000
-1X08	1	4.02.04.043.067	TERMINAL BLOCK 10x2,5mm	WEIDMULLER	WPDB 70/16 1/10 Ref.1939460000
-2F2	1	4.16.03.246.002	FUSE BLOCK III (UL)	GOULD	USCC31
-2F2	3	4.06.02.246.038	FUSE 20A (retard) (UL)	GOULD	ATQR20
-2F12	1	4.16.03.246.002	FUSE BLOCK III (UL)	GOULD	USCC31
-2F12	3	4.06.02.246.003	FUSE 15A (retard) (UL)	GOULD	ATQR15
-2T2	1	4.20.04.310.024	TRIPH.TRANSFORMER 10KvA 60Hz	METH	T3TUL Three phase 10 KvA 60Hz Pri:480V Sec: 48V
-2T12	1	4.20.04.310.030	THREE/MONO TRANS.8kVA/60Hz (UL)	METH	T3TULF-8KVA (TRIMONO) 8KvA 60Hz Pri:480V Sec: 220V
-2X01	1	4.02.04.043.066	TERMINAL BLOCK 35/6mm	WEIDMULLER	WPDB 35-16/6 3/4 Ref.1939450000
-2X02	1	4.02.04.043.066	TERMINAL BLOCK 35/6mm	WEIDMULLER	WPDB 35-16/6 3/4 Ref.1939450000
-2X03	1	4.02.04.043.066	TERMINAL BLOCK 35/6mm	WEIDMULLER	WPDB 35-16/6 3/4 Ref.1939450000
-2X04	1	4.02.04.043.066	TERMINAL BLOCK 35/6mm	WEIDMULLER	WPDB 35-16/6 3/4 Ref.1939450000
-2X05	1	4.02.04.043.066	TERMINAL BLOCK 35/6mm	WEIDMULLER	WPDB 35-16/6 3/4 Ref.1939450000
-3M1	1	4.03.11.122.066	MOTOR CABLE for MP (15m)	ALLEN BRADLEY	2090-CPBM7DF-16AA15 (2090-0000000000750)
-3M1	1	4.03.11.122.067	RESOLVER CABLE (15m)	ALLEN BRADLEY	2090-CFBM7DF-CEAA15 (2090-0000000000705)
-3Q10	1	4.09.02.017.019	MAIN SWITCH 25A (Back Cabinet)	ALLEN BRADLEY	194E-A25-1753
-3Q10	1	4.09.02.017.021	SWITCH BOX (194E-A)	ALLEN BRADLEY	194L-G3572
-3Q10	1	4.09.02.017.020	AUX.CONTACT NO+NC (194E-A)	ALLEN BRADLEY	194E-AP11
-3Q10	1	4.09.02.017.022	GROUND FOR SWITCH BOX (194E-A)	ALLEN BRADLEY	194E-G3653
-3Q10	1	4.09.02.017.023	ACCESSORY SAFETY SWITCH	ALLEN BRADLEY	194L-HE6G-175
-3S0	1	4.04.03.001.012	IND.M18(PNP)(C/M12)8mm NO	OMRON	E2A-M18KS08-M1-B1
-3S0	1	4.03.11.119.107	CONNECTOR M12 4p.90‖ 5mts.	MURRELEKTRONIK	7014-12341-2140500
-3U10	1	4.22.01.122.026	AXIS MODULE KINETIX	ALLEN BRADLEY	2094-BM02-S
-3U10	1	4.03.11.122.036	CONNECTOR E/S KINETIX (26p)	ALLEN BRADLEY	2090-K6CK-D26M

POSITION	QUANTITY	CODE	PART DESIGN	MANUFACTURER	MANUFACTURER REFERENCE
-3U10	1	4.03.10.017.006	CABLE FOR FIBER OPTICAL (0,1m)	ALLEN BRADLEY	2090-SCEP0-1
-3U10	1	4.03.11.122.063	CONEC. FEEDBACK KINETIX (15p)	ALLEN BRADLEY	2090-K6CK-D15M
-3V1	1	4.18.02.043.002	STATIC RELAY 2A	WEIDMULLER	8607370000 MOZ 24VDC/24VDC 2A
-3V2	1	4.18.02.043.002	STATIC RELAY 2A	WEIDMULLER	8607370000 MOZ 24VDC/24VDC 2A
-4Q1	1	4.09.04.005.025	PROT.MOTOR SWITCH (2,5A)	SCHNEIDER	GV2 L07
-4Q10	1	4.09.02.017.019	MAIN SWITCH 25A (Back Cabinet)	ALLEN BRADLEY	194E-A25-1753
-4Q10	1	4.09.02.017.021	SWITCH BOX (194E-A)	ALLEN BRADLEY	194L-G3572
-4Q10	1	4.09.02.017.020	AUX.CONTACT NO+NC (194E-A)	ALLEN BRADLEY	194E-AP11
-4Q10	1	4.09.02.017.022	GROUND FOR SWITCH BOX (194E-A)	ALLEN BRADLEY	194E-G3653
-4Q10	1	4.09.02.017.023	ACCESSORY SAFETY SWITCH	ALLEN BRADLEY	194L-HE6G-175
-4U10	1	4.22.01.017.044	FREQ.CONVERTER III 480V 0,37kW	ALLEN BRADLEY	22D-D1P4N104AA PowerFlex-40P III 480V 0,37Kw (Safety)
-4U10	1	4.22.01.017.048	SAFETY MODULE PowerFlex	ALLEN BRADLEY	20A-DG01
-4U10	1	4.22.01.017.036	DEVICE NET MODULE PowerFlex 40	ALLEN BRADLEY	22-COMM-D
-4U10	1	4.22.01.017.037	ADAPTER DEVICE NET MODULE	ALLEN BRADLEY	22B-CCB
-4X1	1	4.03.11.098.001	HOOD 6p M25 Side "T-Type"	ILME	TMAO 06 L25
-4X1	1	4.03.11.098.005	HOUSING 6p "T-Type"	ILME	TCHI 06 L
-4X1	1	4.03.11.098.011	MALE CONECTOR 6p. CSH	ILME	CSHM 06
-4X1	1	4.03.11.098.015	FEMALE CONECTOR 6p. CSH	ILME	CSHF 06
-4Z1	1	4.06.05.017.019	LINE FILTER III 480V (B)	ALLEN BRADLEY	22-RF012-BS
-5F10	1	4.09.05.007.040	CIRCUIT BREAKER I 2A	SCHNEIDER	MG 24426
-5F10	1	4.09.05.007.083	AUX. CONTACT C60N	SCHNEIDER	A9A26924
-5G1	1	4.06.04.001.010	POWER SUPPLY 12VDC 8,5A	OMRON	S8VM-10012CD (P=100W)
-5X1	1	4.03.11.012.107	MALE CONNECTOR 46 PINS HanEE	HARTING	09 32 046 3001
-5X1	1	4.03.11.012.108	FEMALE CONNECTOR 46 PINS HanEE	HARTING	09 32 046 3101
-5X1	1	4.03.11.098.008	HOUSING 24p "T-Type"	ILME	TCHI 24
-5X1	1	4.03.11.098.004	HOOD 24p M40 Side "T-Type"	ILME	TMAO 24.40
-6X1	1	4.03.11.098.042	HOOD 24p M32 Side "T-Type"	ILME	TMAO 24.32
-6X1	1	4.03.11.098.008	HOUSING 24p "T-Type"	ILME	TCHI 24
-6X1	1	E.03.11.098.050	CONNECTOR MALE 46 (pins)	ILME	CQEM 46
-6X1	1	E.03.11.098.049	CONNECTOR FEMALE 46 (pins)	ILME	CQEF 46

POSITION	QUANTITY	CODE	PART DESIGN	MANUFACTURER	MANUFACTURER REFERENCE
-9Q1	1	4.09.04.005.047	MANUAL MOTOR PROTEC. (1-1,6A)	SCHNEIDER	GV2-ME063
-9Q1	1	4.09.04.005.056	CONTACT MANUAL MOTOR PROTECTOR	SCHNEIDER	GV-AN113 (GV2 AN11)
-9Q10	1	4.09.02.017.019	MAIN SWITCH 25A (Back Cabinet)	ALLEN BRADLEY	194E-A25-1753
-9Q10	1	4.09.02.017.021	SWITCH BOX (194E-A)	ALLEN BRADLEY	194L-G3572
-9Q10	1	4.09.02.017.020	AUX.CONTACT NO+NC (194E-A)	ALLEN BRADLEY	194E-AP11
-9Q10	1	4.09.02.017.022	GROUND FOR SWITCH BOX (194E-A)	ALLEN BRADLEY	194E-G3653
-9Q10	1	4.09.02.017.023	ACCESSORY SAFETY SWITCH	ALLEN BRADLEY	194L-HE6G-175
-9X1	1	4.03.11.098.001	HOOD 6p M25 Side "T-Type"	ILME	TMAO 06 L25
-9X1	1	4.03.11.098.005	HOUSING 6p "T-Type"	ILME	TCHI 06 L
-9X1	1	4.03.11.098.011	MALE CONECTOR 6p. CSH	ILME	CSHM 06
-9X1	1	4.03.11.098.015	FEMALE CONECTOR 6p. CSH	ILME	CSHF 06
-10B1	1	4.06.03.295.008	CONTRAST PHOTOCELL TL-46	DATASENSOR	TL46-WL-815 Ref.954601020 (Old TL46-W-815 Ref.954601000
-10B1	1	4.03.11.012.147	CONNECTOR M12(F) "HARAX" 90¦	HARTING	21 01 140 5091
-10M1	1	4.03.11.122.066	MOTOR CABLE for MP (15m)	ALLEN BRADLEY	2090-CPBM7DF-16AA15 (2090-0000000000750)
-10M1	1	4.03.11.122.067	RESOLVER CABLE (15m)	ALLEN BRADLEY	2090-CFBM7DF-CEAA15 (2090-0000000000705)
-10Q10	1	4.09.02.017.019	MAIN SWITCH 25A (Back Cabinet)	ALLEN BRADLEY	194E-A25-1753
-10Q10	1	4.09.02.017.021	SWITCH BOX (194E-A)	ALLEN BRADLEY	194L-G3572
-10Q10	1	4.09.02.017.020	AUX.CONTACT NO+NC (194E-A)	ALLEN BRADLEY	194E-AP11
-10Q10	1	4.09.02.017.022	GROUND FOR SWITCH BOX (194E-A)	ALLEN BRADLEY	194E-G3653
-10Q10	1	4.09.02.017.023	ACCESSORY SAFETY SWITCH	ALLEN BRADLEY	194L-HE6G-175
-10U10	1	4.22.01.122.020	AXIS MODULE KINETIX	ALLEN BRADLEY	2094-BM01-S
-10U10	1	4.03.11.122.036	CONNECTOR E/S KINETIX (26p)	ALLEN BRADLEY	2090-K6CK-D26M
-10U10	1	4.03.10.017.006	CABLE FOR FIBER OPTICAL (0,1m)	ALLEN BRADLEY	2090-SCEP0-1
-10U10	1	4.03.11.122.063	CONEC. FEEDBACK KINETIX (15p)	ALLEN BRADLEY	2090-K6CK-D15M
-10V1	1	4.18.02.043.002	STATIC RELAY 2A	WEIDMULLER	8607370000 MOZ 24VDC/24VDC 2A
-10X1	1	4.03.11.012.227	MALE CONNECTOR HAN-A4 (Black)	HARTING	09 20 004 2633
-10X1	1	4.03.11.012.228	FEMALE CONNECTOR HAN-A4	HARTING	09 20 004 2733
-10X1	1	4.03.11.012.125	CONNECTOR COVER 7 poles M20 Side	HARTING	19 20 003 0620
-10X1	1	4.03.11.012.055	CONNECTOR SOCKET (PVC)	HARTING	09 20 003 0320
-12F1	1	4.09.05.007.104	CIRCUIT BREAKER III 40A	SCHNEIDER	MG 24544 (Curva D))

POSITION	QUANTITY	CODE	PART DESIGN	MANUFACTURER	MANUFACTURER REFERENCE
-12F2	1	4.09.05.007.066	CIRCUIT BREAKER II 6A "UL"	SCHNEIDER	MG 24520
-12K10	1	4.03.06.005.042	STARTER CONTACTOR 24VDC (32A) SL	SCHNEIDER	LC1-D323-BD
-12M1	1	4.03.11.122.064	MOTOR CABLE for MP (30m)	ALLEN BRADLEY	2090-CPBM7DF-16AA30 (2090-0000000000753)
-12M1	1	4.03.11.122.065	RESOLVER CABLE (30m)	ALLEN BRADLEY	2090-CFBM7DF-CEAA30 (2090-0000000000708)
-12Q10	1	4.09.02.017.019	MAIN SWITCH 25A (Back Cabinet)	ALLEN BRADLEY	194E-A25-1753
-12Q10	1	4.09.02.017.021	SWITCH BOX (194E-A)	ALLEN BRADLEY	194L-G3572
-12Q10	1	4.09.02.017.020	AUX.CONTACT NO+NC (194E-A)	ALLEN BRADLEY	194E-AP11
-12Q10	1	4.09.02.017.022	GROUND FOR SWITCH BOX (194E-A)	ALLEN BRADLEY	194E-G3653
-12Q10	1	4.09.02.017.023	ACCESSORY SAFETY SWITCH	ALLEN BRADLEY	194L-HE6G-175
-12U10	1	4.22.01.122.019	INTEG.MOD.KINETIX (Safety)	ALLEN BRADLEY	2094-BC02-M02-S
-12U10	1	4.03.11.122.036	CONNECTOR E/S KINETIX (26p)	ALLEN BRADLEY	2090-K6CK-D26M
-12U10	1	4.22.01.122.025	POWER RACK 6 AXIS	ALLEN BRADLEY	2094-PRS6
-12U10	1	4.03.10.017.005	CABLE FOR FIBER OPTICAL (3m)	ALLEN BRADLEY	2090-SCEP3-0
-12U10	1	4.03.10.017.005	CABLE FOR FIBER OPTICAL (3m)	ALLEN BRADLEY	2090-SCEP3-0
-12U10	1	4.22.01.122.014	SPARE MODUL KINETIX 6000	ALLEN BRADLEY	2094-PRF
-12U10	1	4.03.11.122.063	CONEC. FEEDBACK KINETIX (15p)	ALLEN BRADLEY	2090-K6CK-D15M
-12U11	1	4.22.01.122.027	SHUNT MODULE KINETIX	ALLEN BRADLEY	2094-BSP2
-12Z1	1	4.06.05.316.001	FILTRE RED III 600V / UL (55A)	no definido	FIN538S1.055.M
-13B1	1	4.06.03.295.008	CONTRAST PHOTOCELL TL-46	DATASENSOR	TL46-WL-815 Ref.954601020 (Old TL46-W-815 Ref.954601000
-13B1	1	4.03.11.012.147	CONNECTOR M12(F) "HARAX" 90¦	HARTING	21 01 140 5091
-13M1	1	4.03.11.122.075	MOTOR CABLE for MPS (12m)	ALLEN BRADLEY	2090-XXNPMF-16S12
-13M1	1	4.03.11.122.076	RESOLVER CABLE (12m)	ALLEN BRADLEY	2090-XXNFMF-S12
-13Q10	1	4.09.02.017.019	MAIN SWITCH 25A (Back Cabinet)	ALLEN BRADLEY	194E-A25-1753
-13Q10	1	4.09.02.017.021	SWITCH BOX (194E-A)	ALLEN BRADLEY	194L-G3572
-13Q10	1	4.09.02.017.020	AUX.CONTACT NO+NC (194E-A)	ALLEN BRADLEY	194E-AP11
-13Q10	1	4.09.02.017.022	GROUND FOR SWITCH BOX (194E-A)	ALLEN BRADLEY	194E-G3653
-13Q10	1	4.09.02.017.023	ACCESSORY SAFETY SWITCH	ALLEN BRADLEY	194L-HE6G-175
-13U10	1	4.22.01.122.020	AXIS MODULE KINETIX	ALLEN BRADLEY	2094-BM01-S
-13U10	1	4.03.11.122.036	CONNECTOR E/S KINETIX (26p)	ALLEN BRADLEY	2090-K6CK-D26M
-13U10	1	4.03.10.017.006	CABLE FOR FIBER OPTICAL (0,1m)	ALLEN BRADLEY	2090-SCEP0-1

POSITION	QUANTITY	CODE	PART DESIGN	MANUFACTURER	MANUFACTURER REFERENCE
-13U10	1	4.03.11.122.063	CONEC. FEEDBACK KINETIX (15p)	ALLEN BRADLEY	2090-K6CK-D15M
-13V1	1	4.18.02.043.002	STATIC RELAY 2A	WEIDMULLER	8607370000 MOZ 24VDC/24VDC 2A
-13X1	1	4.03.11.012.227	MALE CONNECTOR HAN-A4 (Black)	HARTING	09 20 004 2633
-13X1	1	4.03.11.012.228	FEMALE CONNECTOR HAN-A4	HARTING	09 20 004 2733
-13X1	1	4.03.11.012.125	CONNECTOR COVER 7 poles M20 Side	HARTING	19 20 003 0620
-13X1	1	4.03.11.012.055	CONNECTOR SOCKET (PVC)	HARTING	09 20 003 0320
-17F1	1	4.16.03.246.001	FUSE BLOCK II (UL)	GOULD	USBCC2I (Old USCC21)
-17F1	2	4.06.02.246.022	FUSE 15A (normal) (UL)	GOULD	ATMR15
-17F2	1	4.16.03.246.001	FUSE BLOCK II (UL)	GOULD	USBCC2I (Old USCC21)
-17F2	2	4.06.02.246.022	FUSE 15A (normal) (UL)	GOULD	ATMR15
-17H1	1	4.12.01.277.002	FLUORESCENT LAMP (Se.1233)	WEST ELECTRIC	123395010-CM (Serie 1233)(1x55w)
-17H2	1	4.12.01.277.002	FLUORESCENT LAMP (Se.1233)	WEST ELECTRIC	123395010-CM (Serie 1233)(1x55w)
-17H3	1	4.12.01.277.002	FLUORESCENT LAMP (Se.1233)	WEST ELECTRIC	123395010-CM (Serie 1233)(1x55w)
-17H4	1	4.12.01.277.002	FLUORESCENT LAMP (Se.1233)	WEST ELECTRIC	123395010-CM (Serie 1233)(1x55w)
-17H5	1	4.12.01.277.002	FLUORESCENT LAMP (Se.1233)	WEST ELECTRIC	123395010-CM (Serie 1233)(1x55w)
-17H6	1	4.12.01.277.002	FLUORESCENT LAMP (Se.1233)	WEST ELECTRIC	123395010-CM (Serie 1233)(1x55w)
-17H7	1	4.12.01.277.002	FLUORESCENT LAMP (Se.1233)	WEST ELECTRIC	123395010-CM (Serie 1233)(1x55w)
-17H8	1	4.12.01.277.002	FLUORESCENT LAMP (Se.1233)	WEST ELECTRIC	123395010-CM (Serie 1233)(1x55w)
-17X1	1	4.03.11.098.003	HOOD 16p M32 Side "T-Type"	ILME	TMAO 16.32
-17X1	1	4.03.11.098.007	HOUSING 16p "T-Type"	ILME	TCHI 16
-17X1	1	4.03.11.098.013	MALE CONECTOR 16p. CSH	ILME	CSHM 16
-17X1	1	4.03.11.098.017	FEMALE CONECTOR 16p. CSH	ILME	CSHF 16
-17X2	1	4.03.11.098.003	HOOD 16p M32 Side "T-Type"	ILME	TMAO 16.32
-17X2	1	4.03.11.098.007	HOUSING 16p "T-Type"	ILME	TCHI 16
-17X2	1	4.03.11.098.013	MALE CONECTOR 16p. CSH	ILME	CSHM 16
-17X2	1	4.03.11.098.017	FEMALE CONECTOR 16p. CSH	ILME	CSHF 16
-19F1	1	4.16.03.246.001	FUSE BLOCK II (UL)	GOULD	USBCC2I (Old USCC21)
-19F1	2	4.06.02.246.028	FUSE 12A (retard) (UL)	GOULD	ATQR12
-19X3	1	4.03.11.098.001	HOOD 6p M25 Side "T-Type"	ILME	TMAO 06 L25
-19X3	1	4.03.11.098.005	HOUSING 6p "T-Type"	ILME	TCHI 06 L

POSITION	QUANTITY	CODE	PART DESIGN	MANUFACTURER	MANUFACTURER REFERENCE
-19X3	1	4.03.11.098.011	MALE CONECTOR 6p. CSH	ILME	CSHM 06
-19X3	1	4.03.11.098.015	FEMALE CONECTOR 6p. CSH	ILME	CSHF 06
-19X4	1	4.03.11.098.001	HOOD 6p M25 Side "T-Type"	ILME	TMAO 06 L25
-19X4	1	4.03.11.098.005	HOUSING 6p "T-Type"	ILME	TCHI 06 L
-19X4	1	4.03.11.098.011	MALE CONECTOR 6p. CSH	ILME	CSHM 06
-19X4	1	4.03.11.098.015	FEMALE CONECTOR 6p. CSH	ILME	CSHF 06
-20EV1	1	4.22.03.011.002	CABINET FAN (250x250mm)	RITTAL	SK 3241.100 (SK 3325.107)
-20EV1	1	4.22.03.011.004	FAN FILTER CABINET (250mm)	RITTAL	SK 3240.200 (SK 3325.207)
-20EV1	1	4.22.03.011.042	COVER AGAINST WATER	RITTAL	SK 3240.080
-20EV1	1	4.22.03.011.042	COVER AGAINST WATER	RITTAL	SK 3240.080
-20EV1	2	4.22.03.011.049	FILTERING MAT (255mm)	RITTAL	SK 3182.100
-20EV2	1	4.22.03.011.002	CABINET FAN (250x250mm)	RITTAL	SK 3241.100 (SK 3325.107)
-20EV2	1	4.22.03.011.004	FAN FILTER CABINET (250mm)	RITTAL	SK 3240.200 (SK 3325.207)
-20EV2	1	4.22.03.011.042	COVER AGAINST WATER	RITTAL	SK 3240.080
-20EV2	1	4.22.03.011.042	COVER AGAINST WATER	RITTAL	SK 3240.080
-20EV2	2	4.22.03.011.049	FILTERING MAT (255mm)	RITTAL	SK 3182.100
-20EV3	1	4.22.03.011.002	CABINET FAN (250x250mm)	RITTAL	SK 3241.100 (SK 3325.107)
-20EV3	1	4.22.03.011.004	FAN FILTER CABINET (250mm)	RITTAL	SK 3240.200 (SK 3325.207)
-20EV3	1	4.22.03.011.042	COVER AGAINST WATER	RITTAL	SK 3240.080
-20EV3	1	4.22.03.011.042	COVER AGAINST WATER	RITTAL	SK 3240.080
-20EV3	2	4.22.03.011.049	FILTERING MAT (255mm)	RITTAL	SK 3182.100
-20EV4	1	4.22.03.011.002	CABINET FAN (250x250mm)	RITTAL	SK 3241.100 (SK 3325.107)
-20EV4	1	4.22.03.011.004	FAN FILTER CABINET (250mm)	RITTAL	SK 3240.200 (SK 3325.207)
-20EV4	1	4.22.03.011.042	COVER AGAINST WATER	RITTAL	SK 3240.080
-20EV4	1	4.22.03.011.042	COVER AGAINST WATER	RITTAL	SK 3240.080
-20EV4	2	4.22.03.011.049	FILTERING MAT (255mm)	RITTAL	SK 3182.100
-20F2	1	4.16.03.246.001	FUSE BLOCK II (UL)	GOULD	USBCC2I (Old USCC21)
-20F2	2	4.06.02.246.006	FUSE 3A (retard) (UL)	GOULD	ATMR3
-21E1	1	4.02.01.247.001	SOCKET GFI 15AMP	ACME	DRGF 5262I (15 amp-GFI) ACME
-21F1	1	4.16.03.246.001	FUSE BLOCK II (UL)	GOULD	USBCC2I (Old USCC21)

POSITION	QUANTITY	CODE	PART DESIGN	MANUFACTURER	MANUFACTURER REFERENCE
-21F1	2	4.06.02.246.028	FUSE 12A (retard) (UL)	GOULD	ATQR12
-21F3	1	4.09.05.007.043	CIRCUIT BREAKER II 2A	SCHNEIDER	MG 24443
-21F4	1	4.09.05.007.043	CIRCUIT BREAKER II 2A	SCHNEIDER	MG 24443
-21F5	1	4.09.05.007.066	CIRCUIT BREAKER II 6A "UL"	SCHNEIDER	MG 24520
-21HL1	1	4.12.01.011.002	CABINET LIGHT	RITTAL	PS 4155.000 (110-240V)
-21HL1	1	4.03.11.011.006	POWER SUPPLY CONNECTOR (3m)	RITTAL	PS 4315.100
-21HL1	1	4.03.11.011.007	PLUG CONNECTOR	RITTAL	SZ 2507.200
-21HL2	1	4.12.01.011.002	CABINET LIGHT	RITTAL	PS 4155.000 (110-240V)
-21HL2	1	4.03.11.011.006	POWER SUPPLY CONNECTOR (3m)	RITTAL	PS 4315.100
-21HL2	1	4.03.11.011.007	PLUG CONNECTOR	RITTAL	SZ 2507.200
-21HL3	1	4.12.01.011.002	CABINET LIGHT	RITTAL	PS 4155.000 (110-240V)
-21HL3	1	4.03.11.011.006	POWER SUPPLY CONNECTOR (3m)	RITTAL	PS 4315.100
-21K2	1	4.18.02.001.011	AUX.RELAY 24VDC (4 cont.)	OMRON	MY4 IN1-D2 24VD (S)
-21K2	1	E.02.01.001.004	SOCKET RELAY PYF 14S	OMRON	PYF 14S
-21K3	1	4.03.06.005.037	STARTER CONTACTOR 24VDC (12A)TeS	SCHNEIDER	LC1-D123-BL
-21S1	1	4.19.01.005.021	SELECTOR sWITCH 2pos. Style 4	SCHNEIDER	ZB4 BD2
-21S1	1	4.03.02.005.021	CONTACT BLOCK (NO) Style 4	SCHNEIDER	ZB4 BZ101
-21S1	1	4.03.02.005.025	CONTACT (NO) Style 4	SCHNEIDER	ZBE 101
-21S1	1	4.05.04.005.002	LABEL SUPPORT 30x50mm	SCHNEIDER	ZBZ-33
-21S2	1	4.19.01.005.023	KEY SELECTOR 2 Pos	SCHNEIDER	ZB4 BG412
-21S2	1	4.03.02.005.021	CONTACT BLOCK (NO) Style 4	SCHNEIDER	ZB4 BZ101
-21S2	1	4.03.02.005.025	CONTACT (NO) Style 4	SCHNEIDER	ZBE 101
-21S2	1	4.05.04.005.002	LABEL SUPPORT 30x50mm	SCHNEIDER	ZBZ-33
-21T3	1	4.20.04.310.016	THREE/MONO TRANS.3kVA/60Hz (UL)	METH	T1ULF Single phase 3KvA 60Hz Pri:480V Sec: 120/240V
-21X1	1	4.03.11.098.001	HOOD 6p M25 Side "T-Type"	ILME	TMAO 06 L25
-21X1	1	4.03.11.098.005	HOUSING 6p "T-Type"	ILME	TCHI 06 L
-21X1	1	4.03.11.098.011	MALE CONECTOR 6p. CSH	ILME	CSHM 06
-21X1	1	4.03.11.098.015	FEMALE CONECTOR 6p. CSH	ILME	CSHF 06
-22F1	1	4.16.03.246.001	FUSE BLOCK II (UL)	GOULD	USBCC2I (Old USCC21)
-22F1	2	4.06.02.246.006	FUSE 3A (retard) (UL)	GOULD	ATMR3

POSITION	QUANTITY	CODE	PART DESIGN	MANUFACTURER	MANUFACTURER REFERENCE
-22X1	1	4.03.11.098.001	HOOD 6p M25 Side "T-Type"	ILME	TMAO 06 L25
-22X1	1	4.03.11.098.005	HOUSING 6p "T-Type"	ILME	TCHI 06 L
-22X1	1	4.03.11.098.011	MALE CONECTOR 6p. CSH	ILME	CSHM 06
-22X1	1	4.03.11.098.015	FEMALE CONECTOR 6p. CSH	ILME	CSHF 06
-24F1	1	4.09.05.007.040	CIRCUIT BREAKER I 2A	SCHNEIDER	MG 24426
-24X1	1	4.03.11.098.001	HOOD 6p M25 Side "T-Type"	ILME	TMAO 06 L25
-24X1	1	4.03.11.098.005	HOUSING 6p "T-Type"	ILME	TCHI 06 L
-24X1	1	4.03.11.098.011	MALE CONECTOR 6p. CSH	ILME	CSHM 06
-24X1	1	4.03.11.098.015	FEMALE CONECTOR 6p. CSH	ILME	CSHF 06
-24X10	1	4.03.11.098.001	HOOD 6p M25 Side "T-Type"	ILME	TMAO 06 L25
-24X10	1	4.03.11.098.038	HOUSING SURFACE 6p "T-Type"	ILME	TMAP 06 L25
-24X10	1	4.03.11.098.011	MALE CONECTOR 6p. CSH	ILME	CSHM 06
-24X10	1	4.03.11.098.015	FEMALE CONECTOR 6p. CSH	ILME	CSHF 06
-25F1	1	4.16.03.246.001	FUSE BLOCK II (UL)	GOULD	USBCC2I (Old USCC21)
-25F1	2	4.06.02.246.023	FUSE 10A (normal) (UL)	GOULD	ATMR10
-25X1	1	4.03.11.098.001	HOOD 6p M25 Side "T-Type"	ILME	TMAO 06 L25
-25X1	1	4.03.11.098.005	HOUSING 6p "T-Type"	ILME	TCHI 06 L
-25X1	1	4.03.11.098.011	MALE CONECTOR 6p. CSH	ILME	CSHM 06
-25X1	1	4.03.11.098.015	FEMALE CONECTOR 6p. CSH	ILME	CSHF 06
-25X2	1	4.03.11.012.231	MALE CONNECTOR HAN-8D	HARTING	09 36 008 2632
-25X2	1	4.03.11.012.232	FEMALE CONNECTOR HAN-8D	HARTING	09 36 008 2732
-25X2	1	4.03.11.012.125	CONNECTOR COVER 7 poles M20 Side	HARTING	19 20 003 0620
-25X2	1	4.03.11.012.055	CONNECTOR SOCKET (PVC)	HARTING	09 20 003 0320
-27F1	1	4.09.05.007.011	CIRCUIT BREAKER II 6A	SCHNEIDER	A9F79206 (C60N 24335)
-27Q2	1	4.09.04.005.049	MANUAL MOTOR PROTEC. (2,5-4A)	SCHNEIDER	GV2-ME083
-27Q2	1	4.09.04.005.056	CONTACT MANUAL MOTOR PROTECTOR	SCHNEIDER	GV-AN113 (GV2 AN11)
-27X1	1	4.03.11.098.001	HOOD 6p M25 Side "T-Type"	ILME	TMAO 06 L25
-27X1	1	4.03.11.098.005	HOUSING 6p "T-Type"	ILME	TCHI 06 L
-27X1	1	4.03.11.098.011	MALE CONECTOR 6p. CSH	ILME	CSHM 06
-27X1	1	4.03.11.098.015	FEMALE CONECTOR 6p. CSH	ILME	CSHF 06

POSITION	QUANTITY	CODE	PART DESIGN	MANUFACTURER	MANUFACTURER REFERENCE
-27X2	1	4.03.11.098.001	HOOD 6p M25 Side "T-Type"	ILME	TMAO 06 L25
-27X2	1	4.03.11.098.005	HOUSING 6p "T-Type"	ILME	TCHI 06 L
-27X2	1	4.03.11.098.011	MALE CONECTOR 6p. CSH	ILME	CSHM 06
-27X2	1	4.03.11.098.015	FEMALE CONECTOR 6p. CSH	ILME	CSHF 06
-27X20	1	4.03.11.098.001	HOOD 6p M25 Side "T-Type"	ILME	TMAO 06 L25
-27X20	1	4.03.11.098.038	HOUSING SURFACE 6p "T-Type"	ILME	TMAP 06 L25
-27X20	1	4.03.11.098.011	MALE CONECTOR 6p. CSH	ILME	CSHM 06
-27X20	1	4.03.11.098.015	FEMALE CONECTOR 6p. CSH	ILME	CSHF 06
-40F1	1	4.09.05.007.085	CIRCUIT BREAKER II 40A (D) UL	SCHNEIDER	MG 24455
-40F2	1	4.09.05.007.085	CIRCUIT BREAKER II 40A (D) UL	SCHNEIDER	MG 24455
-40F3	1	4.09.05.007.052	CIRCUIT BREAKER II 25A	SCHNEIDER	MG 24453
-40F4	1	4.09.05.007.052	CIRCUIT BREAKER II 25A	SCHNEIDER	MG 24453
-40T1	1	4.20.04.201.003	INTENSITY TRANSFORMER (50/0,05)	POWER TRANSFO	TC-1015005 Ref.4250500007
-40T2	1	4.20.04.201.003	INTENSITY TRANSFORMER (50/0,05)	POWER TRANSFO	TC-1015005 Ref.4250500007
-40T3	1	4.20.04.201.003	INTENSITY TRANSFORMER (50/0,05)	POWER TRANSFO	TC-1015005 Ref.4250500007
-40T4	1	4.20.04.201.003	INTENSITY TRANSFORMER (50/0,05)	POWER TRANSFO	TC-1015005 Ref.4250500007
-40V1	1	4.18.02.001.010	STATIC RELAY DC/AC (50 Amp)	OMRON	G3PE-245B DC12-24 (Old G3PB-245B-VD)
-40V2	1	4.18.02.001.010	STATIC RELAY DC/AC (50 Amp)	OMRON	G3PE-245B DC12-24 (Old G3PB-245B-VD)
-40V3	1	4.18.02.001.007	STATIC RELAY DC/AC 12-24VDC (25A	OMRON	G3PE-225B-DC12-24
-40V4	1	4.18.02.001.007	STATIC RELAY DC/AC 12-24VDC (25A	OMRON	G3PE-225B-DC12-24
-40X1	1	E.03.11.098.047	CONNECTOR FEMALE 10	ILME	CDAF 10 X
-40X1	1	4.03.11.098.030	CONNECTOR COVER HAN-A 10P (Ng)	ILME	CZIW 15 L
-40X1-1	1	3000300006000004	ELECTRICAL LIST	VOLPAK	SOLDADOR Han-A 10 M20 Inox
-40X2	1	E.03.11.098.047	CONNECTOR FEMALE 10	ILME	CDAF 10 X
-40X2	1	4.03.11.098.030	CONNECTOR COVER HAN-A 10P (Ng)	ILME	CZIW 15 L
-40X2-1	1	3000300006000004	ELECTRICAL LIST	VOLPAK	SOLDADOR Han-A 10 M20 Inox
-40X3	1	E.03.11.098.047	CONNECTOR FEMALE 10	ILME	CDAF 10 X
-40X3	1	4.03.11.098.030	CONNECTOR COVER HAN-A 10P (Ng)	ILME	CZIW 15 L
-40X3-1	1	3000300006000004	ELECTRICAL LIST	VOLPAK	SOLDADOR Han-A 10 M20 Inox
-40X4	1	E.03.11.098.047	CONNECTOR FEMALE 10	ILME	CDAF 10 X

POSITION	QUANTITY	CODE	PART DESIGN	MANUFACTURER	MANUFACTURER REFERENCE
-40X4	1	4.03.11.098.030	CONNECTOR COVER HAN-A 10P (Ng)	ILME	CZIW 15 L
-40X4-1	1	3000300006000004	ELECTRICAL LIST	VOLPAK	SOLDADOR Han-A 10 M20 Inox
-40X5	1	E.03.11.098.047	CONNECTOR FEMALE 10	ILME	CDAF 10 X
-40X5	1	4.03.11.098.030	CONNECTOR COVER HAN-A 10P (Ng)	ILME	CZIW 15 L
-40X5-1	1	3000300006000004	ELECTRICAL LIST	VOLPAK	SOLDADOR Han-A 10 M20 Inox
-40X6	1	E.03.11.098.047	CONNECTOR FEMALE 10	ILME	CDAF 10 X
-40X6	1	4.03.11.098.030	CONNECTOR COVER HAN-A 10P (Ng)	ILME	CZIW 15 L
-40X6-1	1	3000300006000004	ELECTRICAL LIST	VOLPAK	SOLDADOR Han-A 10 M20 Inox
-40X10	1	4.03.11.098.004	HOOD 24p M40 Side "T-Type"	ILME	TMAO 24.40
-40X10	1	4.03.11.098.008	HOUSING 24p "T-Type"	ILME	TCHI 24
-40X10	1	4.03.11.098.014	MALE CONECTOR 24p. CSH	ILME	CSHM 24
-40X10	1	4.03.11.098.018	FEMALE CONECTOR 24p. CSH	ILME	CSHF 24
-40XT10	1	4.02.04.043.067	TERMINAL BLOCK 10x2,5mm	WEIDMULLER	WPDB 70/16 1/10 Ref.1939460000
-40XT11	1	4.02.04.043.067	TERMINAL BLOCK 10x2,5mm	WEIDMULLER	WPDB 70/16 1/10 Ref.1939460000
-40XT12	1	4.02.04.043.067	TERMINAL BLOCK 10x2,5mm	WEIDMULLER	WPDB 70/16 1/10 Ref.1939460000
-41F1	1	4.09.05.007.052	CIRCUIT BREAKER II 25A	SCHNEIDER	MG 24453
-41F2	1	4.09.05.007.052	CIRCUIT BREAKER II 25A	SCHNEIDER	MG 24453
-41F3	1	4.09.05.007.052	CIRCUIT BREAKER II 25A	SCHNEIDER	MG 24453
-41F4	1	4.09.05.007.052	CIRCUIT BREAKER II 25A	SCHNEIDER	MG 24453
-41T1	1	4.20.04.201.003	INTENSITY TRANSFORMER (50/0,05)	POWER TRANSFO	TC-1015005 Ref.4250500007
-41T2	1	4.20.04.201.003	INTENSITY TRANSFORMER (50/0,05)	POWER TRANSFO	TC-1015005 Ref.4250500007
-41T3	1	4.20.04.201.003	INTENSITY TRANSFORMER (50/0,05)	POWER TRANSFO	TC-1015005 Ref.4250500007
-41T4	1	4.20.04.201.003	INTENSITY TRANSFORMER (50/0,05)	POWER TRANSFO	TC-1015005 Ref.4250500007
-41V1	1	4.18.02.001.007	STATIC RELAY DC/AC 12-24VDC (25A	OMRON	G3PE-225B-DC12-24
-41V2	1	4.18.02.001.007	STATIC RELAY DC/AC 12-24VDC (25A	OMRON	G3PE-225B-DC12-24
-41V3	1	4.18.02.001.007	STATIC RELAY DC/AC 12-24VDC (25A	OMRON	G3PE-225B-DC12-24
-41V4	1	4.18.02.001.007	STATIC RELAY DC/AC 12-24VDC (25A	OMRON	G3PE-225B-DC12-24
-41X1	1	E.03.11.098.047	CONNECTOR FEMALE 10	ILME	CDAF 10 X
-41X1	1	4.03.11.098.030	CONNECTOR COVER HAN-A 10P (Ng)	ILME	CZIW 15 L
-41X1-1	1	3000300006000004	ELECTRICAL LIST	VOLPAK	SOLDADOR Han-A 10 M20 Inox

POSITION	QUANTITY	CODE	PART DESIGN	MANUFACTURER	MANUFACTURER REFERENCE
-41X2	1	E.03.11.098.047	CONNECTOR FEMALE 10	ILME	CDAF 10 X
-41X2	1	4.03.11.098.030	CONNECTOR COVER HAN-A 10P (Ng)	ILME	CZIW 15 L
-41X2-1	1	3000300006000004	ELECTRICAL LIST	VOLPAK	SOLDADOR Han-A 10 M20 Inox
-41X3	1	E.03.11.098.047	CONNECTOR FEMALE 10	ILME	CDAF 10 X
-41X3	1	4.03.11.098.030	CONNECTOR COVER HAN-A 10P (Ng)	ILME	CZIW 15 L
-41X3-1	1	3000300008000004	ELECTRICAL LIST	VOLPAK	SOLDADOR Han-A 10 Top M20 Inox
-41X4	1	E.03.11.098.047	CONNECTOR FEMALE 10	ILME	CDAF 10 X
-41X4	1	4.03.11.098.030	CONNECTOR COVER HAN-A 10P (Ng)	ILME	CZIW 15 L
-41X4-1	1	3000300008000004	ELECTRICAL LIST	VOLPAK	SOLDADOR Han-A 10 Top M20 Inox
-41X5	1	E.03.11.098.047	CONNECTOR FEMALE 10	ILME	CDAF 10 X
-41X5	1	4.03.11.098.030	CONNECTOR COVER HAN-A 10P (Ng)	ILME	CZIW 15 L
-41X5-1	1	3000300008000004	ELECTRICAL LIST	VOLPAK	SOLDADOR Han-A 10 Top M20 Inox
-41X6	1	E.03.11.098.047	CONNECTOR FEMALE 10	ILME	CDAF 10 X
-41X6	1	4.03.11.098.030	CONNECTOR COVER HAN-A 10P (Ng)	ILME	CZIW 15 L
-41X6-1	1	3000300008000004	ELECTRICAL LIST	VOLPAK	SOLDADOR Han-A 10 Top M20 Inox
-41X10	1	4.03.11.098.004	HOOD 24p M40 Side "T-Type"	ILME	TMAO 24.40
-41X10	1	4.03.11.098.008	HOUSING 24p "T-Type"	ILME	TCHI 24
-41X10	1	4.03.11.098.014	MALE CONECTOR 24p. CSH	ILME	CSHM 24
-41X10	1	4.03.11.098.018	FEMALE CONECTOR 24p. CSH	ILME	CSHF 24
-41XT10	1	4.02.04.043.067	TERMINAL BLOCK 10x2,5mm	WEIDMULLER	WPDB 70/16 1/10 Ref.1939460000
-41XT11	1	4.02.04.043.067	TERMINAL BLOCK 10x2,5mm	WEIDMULLER	WPDB 70/16 1/10 Ref.1939460000
-41XT12	1	4.02.04.043.067	TERMINAL BLOCK 10x2,5mm	WEIDMULLER	WPDB 70/16 1/10 Ref.1939460000
-42F1	1	4.09.05.007.052	CIRCUIT BREAKER II 25A	SCHNEIDER	MG 24453
-42F2	1	4.09.05.007.052	CIRCUIT BREAKER II 25A	SCHNEIDER	MG 24453
-42F3	1	4.09.05.007.052	CIRCUIT BREAKER II 25A	SCHNEIDER	MG 24453
-42F4	1	4.09.05.007.052	CIRCUIT BREAKER II 25A	SCHNEIDER	MG 24453
-42T1	1	4.20.04.201.003	INTENSITY TRANSFORMER (50/0,05)	POWER TRANSFO	TC-1015005 Ref.4250500007
-42T2	1	4.20.04.201.003	INTENSITY TRANSFORMER (50/0,05)	POWER TRANSFO	TC-1015005 Ref.4250500007
-42T3	1	4.20.04.201.003	INTENSITY TRANSFORMER (50/0,05)	POWER TRANSFO	TC-1015005 Ref.4250500007
-42T4	1	4.20.04.201.003	INTENSITY TRANSFORMER (50/0,05)	POWER TRANSFO	TC-1015005 Ref.4250500007

POSITION	QUANTITY	CODE	PART DESIGN	MANUFACTURER	MANUFACTURER REFERENCE
-42V1	1	4.18.02.001.007	STATIC RELAY DC/AC 12-24VDC (25A	OMRON	G3PE-225B-DC12-24
-42V2	1	4.18.02.001.007	STATIC RELAY DC/AC 12-24VDC (25A	OMRON	G3PE-225B-DC12-24
-42V3	1	4.18.02.001.007	STATIC RELAY DC/AC 12-24VDC (25A	OMRON	G3PE-225B-DC12-24
-42V4	1	4.18.02.001.007	STATIC RELAY DC/AC 12-24VDC (25A	OMRON	G3PE-225B-DC12-24
-42X1	1	E.03.11.098.047	CONNECTOR FEMALE 10	ILME	CDAF 10 X
-42X1	1	4.03.11.098.030	CONNECTOR COVER HAN-A 10P (Ng)	ILME	CZIW 15 L
-42X1-1	1	3000300006000004	ELECTRICAL LIST	VOLPAK	SOLDADOR Han-A 10 M20 Inox
-42X2	1	E.03.11.098.047	CONNECTOR FEMALE 10	ILME	CDAF 10 X
-42X2	1	4.03.11.098.030	CONNECTOR COVER HAN-A 10P (Ng)	ILME	CZIW 15 L
-42X2-1	1	3000300006000004	ELECTRICAL LIST	VOLPAK	SOLDADOR Han-A 10 M20 Inox
-42X3	1	E.03.11.098.047	CONNECTOR FEMALE 10	ILME	CDAF 10 X
-42X3	1	4.03.11.098.030	CONNECTOR COVER HAN-A 10P (Ng)	ILME	CZIW 15 L
-42X3-1	1	3000300006000004	ELECTRICAL LIST	VOLPAK	SOLDADOR Han-A 10 M20 Inox
-42X4	1	E.03.11.098.047	CONNECTOR FEMALE 10	ILME	CDAF 10 X
-42X4	1	4.03.11.098.030	CONNECTOR COVER HAN-A 10P (Ng)	ILME	CZIW 15 L
-42X4-1	1	3000300006000004	ELECTRICAL LIST	VOLPAK	SOLDADOR Han-A 10 M20 Inox
-42X10	1	4.03.11.098.004	HOOD 24p M40 Side "T-Type"	ILME	TMAO 24.40
-42X10	1	4.03.11.098.008	HOUSING 24p "T-Type"	ILME	TCHI 24
-42X10	1	4.03.11.098.014	MALE CONECTOR 24p. CSH	ILME	CSHM 24
-42X10	1	4.03.11.098.018	FEMALE CONECTOR 24p. CSH	ILME	CSHF 24
-43F1	1	4.09.05.007.052	CIRCUIT BREAKER II 25A	SCHNEIDER	MG 24453
-43F2	1	4.09.05.007.052	CIRCUIT BREAKER II 25A	SCHNEIDER	MG 24453
-43T1	1	4.20.04.201.003	INTENSITY TRANSFORMER (50/0,05)	POWER TRANSFO	TC-1015005 Ref.4250500007
-43T2	1	4.20.04.201.003	INTENSITY TRANSFORMER (50/0,05)	POWER TRANSFO	TC-1015005 Ref.4250500007
-43V1	1	4.18.02.001.007	STATIC RELAY DC/AC 12-24VDC (25A	OMRON	G3PE-225B-DC12-24
-43V2	1	4.18.02.001.007	STATIC RELAY DC/AC 12-24VDC (25A	OMRON	G3PE-225B-DC12-24
-43X1	1	E.03.11.098.047	CONNECTOR FEMALE 10	ILME	CDAF 10 X
-43X1	1	4.03.11.098.030	CONNECTOR COVER HAN-A 10P (Ng)	ILME	CZIW 15 L
-43X1-1	1	3000300008000004	ELECTRICAL LIST	VOLPAK	SOLDADOR Han-A 10 Top M20 Inox
-43X2	1	E.03.11.098.047	CONNECTOR FEMALE 10	ILME	CDAF 10 X

POSITION	QUANTITY	CODE	PART DESIGN	MANUFACTURER	MANUFACTURER REFERENCE
-43X2	1	4.03.11.098.030	CONNECTOR COVER HAN-A 10P (Ng)	ILME	CZIW 15 L
-43X2-1	1	3000300008000004	ELECTRICAL LIST	VOLPAK	SOLDADOR Han-A 10 Top M20 Inox
-43X3	1	E.03.11.098.047	CONNECTOR FEMALE 10	ILME	CDAF 10 X
-43X3	1	4.03.11.098.030	CONNECTOR COVER HAN-A 10P (Ng)	ILME	CZIW 15 L
-43X3-1	1	3000300008000004	ELECTRICAL LIST	VOLPAK	SOLDADOR Han-A 10 Top M20 Inox
-43X4	1	E.03.11.098.047	CONNECTOR FEMALE 10	ILME	CDAF 10 X
-43X4	1	4.03.11.098.030	CONNECTOR COVER HAN-A 10P (Ng)	ILME	CZIW 15 L
-43X4-1	1	3000300008000004	ELECTRICAL LIST	VOLPAK	SOLDADOR Han-A 10 Top M20 Inox
-46F1	1	4.09.05.007.045	CIRCUIT BREAKER II 10A	SCHNEIDER	MG 24449
-46F2	1	4.09.05.007.045	CIRCUIT BREAKER II 10A	SCHNEIDER	MG 24449
-46F3	1	4.09.05.007.045	CIRCUIT BREAKER II 10A	SCHNEIDER	MG 24449
-46F4	1	4.09.05.007.045	CIRCUIT BREAKER II 10A	SCHNEIDER	MG 24449
-46T1	1	4.20.04.201.003	INTENSITY TRANSFORMER (50/0,05)	POWER TRANSFO	TC-1015005 Ref.4250500007
-46T2	1	4.20.04.201.003	INTENSITY TRANSFORMER (50/0,05)	POWER TRANSFO	TC-1015005 Ref.4250500007
-46T3	1	4.20.04.201.003	INTENSITY TRANSFORMER (50/0,05)	POWER TRANSFO	TC-1015005 Ref.4250500007
-46T4	1	4.20.04.201.003	INTENSITY TRANSFORMER (50/0,05)	POWER TRANSFO	TC-1015005 Ref.4250500007
-46V1	1	4.18.02.001.007	STATIC RELAY DC/AC 12-24VDC (25A	OMRON	G3PE-225B-DC12-24
-46V2	1	4.18.02.001.007	STATIC RELAY DC/AC 12-24VDC (25A	OMRON	G3PE-225B-DC12-24
-46V3	1	4.18.02.001.007	STATIC RELAY DC/AC 12-24VDC (25A	OMRON	G3PE-225B-DC12-24
-46V4	1	4.18.02.001.007	STATIC RELAY DC/AC 12-24VDC (25A	OMRON	G3PE-225B-DC12-24
-46X1	1	E.03.11.098.047	CONNECTOR FEMALE 10	ILME	CDAF 10 X
-46X1	1	4.03.11.098.030	CONNECTOR COVER HAN-A 10P (Ng)	ILME	CZIW 15 L
-46X1-1	1	3000300008000004	ELECTRICAL LIST	VOLPAK	SOLDADOR Han-A 10 Top M20 Inox
-46X2	1	E.03.11.098.047	CONNECTOR FEMALE 10	ILME	CDAF 10 X
-46X2	1	4.03.11.098.030	CONNECTOR COVER HAN-A 10P (Ng)	ILME	CZIW 15 L
-46X2-1	1	3000300008000004	ELECTRICAL LIST	VOLPAK	SOLDADOR Han-A 10 Top M20 Inox
-46X3	1	E.03.11.098.047	CONNECTOR FEMALE 10	ILME	CDAF 10 X
-46X3	1	4.03.11.098.030	CONNECTOR COVER HAN-A 10P (Ng)	ILME	CZIW 15 L
-46X3-1	1	3000300008000004	ELECTRICAL LIST	VOLPAK	SOLDADOR Han-A 10 Top M20 Inox
-46X4	1	E.03.11.098.047	CONNECTOR FEMALE 10	ILME	CDAF 10 X

POSITION	QUANTITY	CODE	PART DESIGN	MANUFACTURER	MANUFACTURER REFERENCE
-46X4	1	4.03.11.098.030	CONNECTOR COVER HAN-A 10P (Ng)	ILME	CZIW 15 L
-46X4-1	1	3000300008000004	ELECTRICAL LIST	VOLPAK	SOLDADOR Han-A 10 Top M20 Inox
-46X10	1	4.03.11.098.004	HOOD 24p M40 Side "T-Type"	ILME	TMAO 24.40
-46X10	1	4.03.11.098.008	HOUSING 24p "T-Type"	ILME	TCHI 24
-46X10	1	4.03.11.098.014	MALE CONECTOR 24p. CSH	ILME	CSHM 24
-46X10	1	4.03.11.098.018	FEMALE CONECTOR 24p. CSH	ILME	CSHF 24
-47F1	1	4.09.05.007.045	CIRCUIT BREAKER II 10A	SCHNEIDER	MG 24449
-47F2	1	4.09.05.007.045	CIRCUIT BREAKER II 10A	SCHNEIDER	MG 24449
-47F3	1	4.09.05.007.045	CIRCUIT BREAKER II 10A	SCHNEIDER	MG 24449
-47F4	1	4.09.05.007.045	CIRCUIT BREAKER II 10A	SCHNEIDER	MG 24449
-47T1	1	4.20.04.201.003	INTENSITY TRANSFORMER (50/0,05)	POWER TRANSFO	TC-1015005 Ref.4250500007
-47T2	1	4.20.04.201.003	INTENSITY TRANSFORMER (50/0,05)	POWER TRANSFO	TC-1015005 Ref.4250500007
-47T3	1	4.20.04.201.003	INTENSITY TRANSFORMER (50/0,05)	POWER TRANSFO	TC-1015005 Ref.4250500007
-47T4	1	4.20.04.201.003	INTENSITY TRANSFORMER (50/0,05)	POWER TRANSFO	TC-1015005 Ref.4250500007
-47V1	1	4.18.02.001.007	STATIC RELAY DC/AC 12-24VDC (25A	OMRON	G3PE-225B-DC12-24
-47V2	1	4.18.02.001.007	STATIC RELAY DC/AC 12-24VDC (25A	OMRON	G3PE-225B-DC12-24
-47V3	1	4.18.02.001.007	STATIC RELAY DC/AC 12-24VDC (25A	OMRON	G3PE-225B-DC12-24
-47V4	1	4.18.02.001.007	STATIC RELAY DC/AC 12-24VDC (25A	OMRON	G3PE-225B-DC12-24
-47X1	1	E.03.11.098.047	CONNECTOR FEMALE 10	ILME	CDAF 10 X
-47X1	1	4.03.11.098.030	CONNECTOR COVER HAN-A 10P (Ng)	ILME	CZIW 15 L
-47X1-1	1	3000300008000004	ELECTRICAL LIST	VOLPAK	SOLDADOR Han-A 10 Top M20 Inox
-47X2	1	E.03.11.098.047	CONNECTOR FEMALE 10	ILME	CDAF 10 X
-47X2	1	4.03.11.098.030	CONNECTOR COVER HAN-A 10P (Ng)	ILME	CZIW 15 L
-47X2-1	1	3000300008000004	ELECTRICAL LIST	VOLPAK	SOLDADOR Han-A 10 Top M20 Inox
-47X3	1	E.03.11.098.047	CONNECTOR FEMALE 10	ILME	CDAF 10 X
-47X3	1	4.03.11.098.030	CONNECTOR COVER HAN-A 10P (Ng)	ILME	CZIW 15 L
-47X3-1	1	3000300008000004	ELECTRICAL LIST	VOLPAK	SOLDADOR Han-A 10 Top M20 Inox
-47X4	1	E.03.11.098.047	CONNECTOR FEMALE 10	ILME	CDAF 10 X
-47X4	1	4.03.11.098.030	CONNECTOR COVER HAN-A 10P (Ng)	ILME	CZIW 15 L
-47X4-1	1	3000300008000004	ELECTRICAL LIST	VOLPAK	SOLDADOR Han-A 10 Top M20 Inox

POSITION	QUANTITY	CODE	PART DESIGN	MANUFACTURER	MANUFACTURER REFERENCE
-63F1	1	4.09.05.007.052	CIRCUIT BREAKER II 25A	SCHNEIDER	MG 24453
-63F2	1	4.09.05.007.044	CIRCUIT BREAKER II 6A	SCHNEIDER	MG 24447
-63F3	1	4.09.05.007.044	CIRCUIT BREAKER II 6A	SCHNEIDER	MG 24447
-63T1	1	4.20.04.201.003	INTENSITY TRANSFORMER (50/0,05)	POWER TRANSFO	TC-1015005 Ref.4250500007
-63T2	1	4.20.04.201.003	INTENSITY TRANSFORMER (50/0,05)	POWER TRANSFO	TC-1015005 Ref.4250500007
-63T3	1	4.20.04.201.003	INTENSITY TRANSFORMER (50/0,05)	POWER TRANSFO	TC-1015005 Ref.4250500007
-63V1	1	4.18.02.001.007	STATIC RELAY DC/AC 12-24VDC (25A	OMRON	G3PE-225B-DC12-24
-63V2	1	4.18.02.001.007	STATIC RELAY DC/AC 12-24VDC (25A	OMRON	G3PE-225B-DC12-24
-63V3	1	4.18.02.001.007	STATIC RELAY DC/AC 12-24VDC (25A	OMRON	G3PE-225B-DC12-24
-63X2	1	4.03.11.098.003	HOOD 16p M32 Side "T-Type"	ILME	TMAO 16.32
-63X2	1	4.03.11.098.007	HOUSING 16p "T-Type"	ILME	TCHI 16
-63X2	1	4.03.11.098.013	MALE CONECTOR 16p. CSH	ILME	CSHM 16
-63X2	1	4.03.11.098.017	FEMALE CONECTOR 16p. CSH	ILME	CSHF 16
-63X3	1	4.03.11.098.003	HOOD 16p M32 Side "T-Type"	ILME	TMAO 16.32
-63X3	1	4.03.11.098.007	HOUSING 16p "T-Type"	ILME	TCHI 16
-63X3	1	4.03.11.098.013	MALE CONECTOR 16p. CSH	ILME	CSHM 16
-63X3	1	4.03.11.098.017	FEMALE CONECTOR 16p. CSH	ILME	CSHF 16
-64F1	1	4.09.05.007.045	CIRCUIT BREAKER II 10A	SCHNEIDER	MG 24449
-64V1	1	4.18.02.001.007	STATIC RELAY DC/AC 12-24VDC (25A	OMRON	G3PE-225B-DC12-24
-70N0	1	4.03.12.001.010	SOCKET HEADER E5ZN (24 pins)	OMRON	E5ZNSCT24S500
-70N0	1	4.03.12.001.014	HEADER DEVICE NET E5ZN	OMRON	E5ZN-DRT DC24V
-70N1	1	4.03.12.001.011	SECONDARY HEADER E5ZN (18 pins)	OMRON	E5ZNSCT18S500
-70N1	1	4.03.12.001.012	2 LOOP CONTROLLER Pt100 (Pnp)	OMRON	E5ZN2TPH03PFLKDC24
-70N2	1	4.03.12.001.011	SECONDARY HEADER E5ZN (18 pins)	OMRON	E5ZNSCT18S500
-70N2	1	4.03.12.001.012	2 LOOP CONTROLLER Pt100 (Pnp)	OMRON	E5ZN2TPH03PFLKDC24
-70N3	1	4.03.12.001.011	SECONDARY HEADER E5ZN (18 pins)	OMRON	E5ZNSCT18S500
-70N3	1	4.03.12.001.012	2 LOOP CONTROLLER Pt100 (Pnp)	OMRON	E5ZN2TPH03PFLKDC24
-70N4	1	4.03.12.001.011	SECONDARY HEADER E5ZN (18 pins)	OMRON	E5ZNSCT18S500
-70N4	1	4.03.12.001.012	2 LOOP CONTROLLER Pt100 (Pnp)	OMRON	E5ZN2TPH03PFLKDC24
-70N5	1	4.03.12.001.011	SECONDARY HEADER E5ZN (18 pins)	OMRON	E5ZNSCT18S500

POSITION	QUANTITY	CODE	PART DESIGN	MANUFACTURER	MANUFACTURER REFERENCE
-70N5	1	4.03.12.001.012	2 LOOP CONTROLLER Pt100 (Pnp)	OMRON	E5ZN2TPH03PFLKDC24
-70N6	1	4.03.12.001.011	SECONDARY HEADER E5ZN (18 pins)	OMRON	E5ZNSCT18S500
-70N6	1	4.03.12.001.012	2 LOOP CONTROLLER Pt100 (Pnp)	OMRON	E5ZN2TPH03PFLKDC24
-70X10	1	4.03.11.098.004	HOOD 24p M40 Side "T-Type"	ILME	TMAO 24.40
-70X10	1	4.03.11.098.008	HOUSING 24p "T-Type"	ILME	TCHI 24
-70X10	1	4.03.11.098.014	MALE CONECTOR 24p. CSH	ILME	CSHM 24
-70X10	1	4.03.11.098.018	FEMALE CONECTOR 24p. CSH	ILME	CSHF 24
-70X11	1	4.03.11.098.004	HOOD 24p M40 Side "T-Type"	ILME	TMAO 24.40
-70X11	1	4.03.11.098.008	HOUSING 24p "T-Type"	ILME	TCHI 24
-70X11	1	4.03.11.098.014	MALE CONECTOR 24p. CSH	ILME	CSHM 24
-70X11	1	4.03.11.098.018	FEMALE CONECTOR 24p. CSH	ILME	CSHF 24
-70X20	1	4.03.11.098.004	HOOD 24p M40 Side "T-Type"	ILME	TMAO 24.40
-70X20	1	4.03.11.098.008	HOUSING 24p "T-Type"	ILME	TCHI 24
-70X20	1	4.03.11.098.014	MALE CONECTOR 24p. CSH	ILME	CSHM 24
-70X20	1	4.03.11.098.018	FEMALE CONECTOR 24p. CSH	ILME	CSHF 24
-71N1	1	4.03.12.001.010	SOCKET HEADER E5ZN (24 pins)	OMRON	E5ZNSCT24S500
-71N1	1	4.03.12.001.012	2 LOOP CONTROLLER Pt100 (Pnp)	OMRON	E5ZN2TPH03PFLKDC24
-71R0	1	4.18.04.085.010	RESISTANCE 120 Ohm	RADIO SONDA	120 Ohm 1/4w
-72N0	1	4.03.12.001.010	SOCKET HEADER E5ZN (24 pins)	OMRON	E5ZNSCT24S500
-72N0	1	4.03.12.001.014	HEADER DEVICE NET E5ZN	OMRON	E5ZN-DRT DC24V
-72N1	1	4.03.12.001.011	SECONDARY HEADER E5ZN (18 pins)	OMRON	E5ZNSCT18S500
-72N1	1	4.03.12.001.016	2 LOOP CONTROLLER Type J (Pnp)	OMRON	E5ZN-2TPH03TC-FLK DC24
-72N2	1	4.03.12.001.011	SECONDARY HEADER E5ZN (18 pins)	OMRON	E5ZNSCT18S500
-72N2	1	4.03.12.001.016	2 LOOP CONTROLLER Type J (Pnp)	OMRON	E5ZN-2TPH03TC-FLK DC24
-72N3	1	4.03.12.001.011	SECONDARY HEADER E5ZN (18 pins)	OMRON	E5ZNSCT18S500
-72N3	1	4.03.12.001.016	2 LOOP CONTROLLER Type J (Pnp)	OMRON	E5ZN-2TPH03TC-FLK DC24
-72N4	1	4.03.12.001.011	SECONDARY HEADER E5ZN (18 pins)	OMRON	E5ZNSCT18S500
-72N4	1	4.03.12.001.016	2 LOOP CONTROLLER Type J (Pnp)	OMRON	E5ZN-2TPH03TC-FLK DC24
-72R0	1	4.18.04.085.010	RESISTANCE 120 Ohm	RADIO SONDA	120 Ohm 1/4w
-72X10	1	4.03.11.098.004	HOOD 24p M40 Side "T-Type"	ILME	TMAO 24.40

POSITION	QUANTITY	CODE	PART DESIGN	MANUFACTURER	MANUFACTURER REFERENCE
-72X10	1	4.03.11.098.008	HOUSING 24p "T-Type"	ILME	TCHI 24
-72X10	1	4.03.11.098.014	MALE CONECTOR 24p. CSH	ILME	CSHM 24
-72X10	1	4.03.11.098.018	FEMALE CONECTOR 24p. CSH	ILME	CSHF 24
-73N4	1	4.03.12.001.011	SECONDARY HEADER E5ZN (18 pins)	OMRON	E5ZNSCT18S500
-73N4	1	4.03.12.001.012	2 LOOP CONTROLLER Pt100 (Pnp)	OMRON	E5ZN2TPH03PFLKDC24
-73N5	1	4.03.12.001.011	SECONDARY HEADER E5ZN (18 pins)	OMRON	E5ZNSCT18S500
-73N5	1	4.03.12.001.012	2 LOOP CONTROLLER Pt100 (Pnp)	OMRON	E5ZN2TPH03PFLKDC24
-73R4	1	4.18.04.085.010	RESISTANCE 120 Ohm	RADIO SONDA	120 Ohm 1/4w
-101X1	1	4.03.11.098.001	HOOD 6p M25 Side "T-Type"	ILME	TMAO 06 L25
-101X1	1	4.03.11.098.005	HOUSING 6p "T-Type"	ILME	TCHI 06 L
-101X1	1	4.03.11.098.011	MALE CONECTOR 6p. CSH	ILME	CSHM 06
-101X1	1	4.03.11.098.015	FEMALE CONECTOR 6p. CSH	ILME	CSHF 06
-160Q2	1	4.09.04.005.050	MANUAL MOTOR PROTEC. (4-6,3A)	SCHNEIDER	GV2-ME103
-160Q2	1	4.09.04.005.056	CONTACT MANUAL MOTOR PROTECTOR	SCHNEIDER	GV-AN113 (GV2 AN11)
-160X2	1	4.03.11.098.001	HOOD 6p M25 Side "T-Type"	ILME	TMAO 06 L25
-160X2	1	4.03.11.098.005	HOUSING 6p "T-Type"	ILME	TCHI 06 L
-160X2	1	4.03.11.098.011	MALE CONECTOR 6p. CSH	ILME	CSHM 06
-160X2	1	4.03.11.098.015	FEMALE CONECTOR 6p. CSH	ILME	CSHF 06
-160X20	1	4.03.11.098.001	HOOD 6p M25 Side "T-Type"	ILME	TMAO 06 L25
-160X20	1	4.03.11.098.038	HOUSING SURFACE 6p "T-Type"	ILME	TMAP 06 L25
-160X20	1	4.03.11.098.011	MALE CONECTOR 6p. CSH	ILME	CSHM 06
-160X20	1	4.03.11.098.015	FEMALE CONECTOR 6p. CSH	ILME	CSHF 06
-162Q1	1	4.09.04.005.017	MAGNETIC PROTECTED SWITCH 6,3A	SCHNEIDER	GV2 L10
-162Q2	1	4.09.04.005.017	MAGNETIC PROTECTED SWITCH 6,3A	SCHNEIDER	GV2 L10
-162Q10	1	4.09.02.017.019	MAIN SWITCH 25A (Back Cabinet)	ALLEN BRADLEY	194E-A25-1753
-162Q10	1	4.09.02.017.021	SWITCH BOX (194E-A)	ALLEN BRADLEY	194L-G3572
-162Q10	1	4.09.02.017.020	AUX.CONTACT NO+NC (194E-A)	ALLEN BRADLEY	194E-AP11
-162Q10	1	4.09.02.017.022	GROUND FOR SWITCH BOX (194E-A)	ALLEN BRADLEY	194E-G3653
-162Q10	1	4.09.02.017.023	ACCESSORY SAFETY SWITCH	ALLEN BRADLEY	194L-HE6G-175
-162Q11	1	4.09.02.017.019	MAIN SWITCH 25A (Back Cabinet)	ALLEN BRADLEY	194E-A25-1753

POSITION	QUANTITY	CODE	PART DESIGN	MANUFACTURER	MANUFACTURER REFERENCE
-162Q11	1	4.09.02.017.021	SWITCH BOX (194E-A)	ALLEN BRADLEY	194L-G3572
-162Q11	1	4.09.02.017.020	AUX.CONTACT NO+NC (194E-A)	ALLEN BRADLEY	194E-AP11
-162Q11	1	4.09.02.017.022	GROUND FOR SWITCH BOX (194E-A)	ALLEN BRADLEY	194E-G3653
-162Q11	1	4.09.02.017.023	ACCESSORY SAFETY SWITCH	ALLEN BRADLEY	194L-HE6G-175
-162U10	1	4.22.01.017.045	FREQ.CONVERTER III 480V 0,75kW	ALLEN BRADLEY	22D-D2P3N104AA PowerFlex-40P III 480V 0,75Kw (Safety)
-162U10	1	4.22.01.017.036	DEVICE NET MODULE PowerFlex 40	ALLEN BRADLEY	22-COMM-D
-162U10	1	4.22.01.017.037	ADAPTER DEVICE NET MODULE	ALLEN BRADLEY	22B-CCB
-162U11	1	4.22.01.017.045	FREQ.CONVERTER III 480V 0,75kW	ALLEN BRADLEY	22D-D2P3N104AA PowerFlex-40P III 480V 0,75Kw (Safety)
-162U11	1	4.22.01.017.036	DEVICE NET MODULE PowerFlex 40	ALLEN BRADLEY	22-COMM-D
-162U11	1	4.22.01.017.037	ADAPTER DEVICE NET MODULE	ALLEN BRADLEY	22B-CCB
-162X1	1	4.03.11.098.001	HOOD 6p M25 Side "T-Type"	ILME	TMAO 06 L25
-162X1	1	4.03.11.098.005	HOUSING 6p "T-Type"	ILME	TCHI 06 L
-162X1	1	4.03.11.098.011	MALE CONECTOR 6p. CSH	ILME	CSHM 06
-162X1	1	4.03.11.098.015	FEMALE CONECTOR 6p. CSH	ILME	CSHF 06
-162X2	1	4.03.11.098.001	HOOD 6p M25 Side "T-Type"	ILME	TMAO 06 L25
-162X2	1	4.03.11.098.005	HOUSING 6p "T-Type"	ILME	TCHI 06 L
-162X2	1	4.03.11.098.011	MALE CONECTOR 6p. CSH	ILME	CSHM 06
-162X2	1	4.03.11.098.015	FEMALE CONECTOR 6p. CSH	ILME	CSHF 06
-162Z1	1	4.06.05.017.019	LINE FILTER III 480V (B)	ALLEN BRADLEY	22-RF012-BS
-162Z2	1	4.06.05.017.019	LINE FILTER III 480V (B)	ALLEN BRADLEY	22-RF012-BS
-163F1	1	4.09.05.007.045	CIRCUIT BREAKER II 10A	SCHNEIDER	MG 24449
-163X1	1	4.03.11.098.001	HOOD 6p M25 Side "T-Type"	ILME	TMAO 06 L25
-163X1	1	4.03.11.098.005	HOUSING 6p "T-Type"	ILME	TCHI 06 L
-163X1	1	4.03.11.098.011	MALE CONECTOR 6p. CSH	ILME	CSHM 06
-163X1	1	4.03.11.098.015	FEMALE CONECTOR 6p. CSH	ILME	CSHF 06
-184F1	1	4.09.05.007.049	CIRCUIT BREAKER III 32A	SCHNEIDER	MG 24543
-184F2	1	4.09.05.007.066	CIRCUIT BREAKER II 6A "UL"	SCHNEIDER	MG 24520
-184K10	1	4.03.06.005.042	STARTER CONTACTOR 24VDC (32A) SL	SCHNEIDER	LC1-D323-BD
-184M1	1	4.03.11.122.066	MOTOR CABLE for MP (15m)	ALLEN BRADLEY	2090-CPBM7DF-16AA15 (2090-0000000000750)
-184M1	1	4.03.11.122.067	RESOLVER CABLE (15m)	ALLEN BRADLEY	2090-CFBM7DF-CEAA15 (2090-0000000000705)

POSITION	QUANTITY	CODE	PART DESIGN	MANUFACTURER	MANUFACTURER REFERENCE
-184Q10	1	4.09.02.017.019	MAIN SWITCH 25A (Back Cabinet)	ALLEN BRADLEY	194E-A25-1753
-184Q10	1	4.09.02.017.021	SWITCH BOX (194E-A)	ALLEN BRADLEY	194L-G3572
-184Q10	1	4.09.02.017.020	AUX.CONTACT NO+NC (194E-A)	ALLEN BRADLEY	194E-AP11
-184Q10	1	4.09.02.017.022	GROUND FOR SWITCH BOX (194E-A)	ALLEN BRADLEY	194E-G3653
-184Q10	1	4.09.02.017.023	ACCESSORY SAFETY SWITCH	ALLEN BRADLEY	194L-HE6G-175
-184S1	1	4.04.03.001.010	IND.M12(PNP)(C/M12)4mm NO	OMRON	E2A-M12KS04-M1-B1
-184S1	1	4.03.11.119.107	CONNECTOR M12 4p.90‖ 5mts.	MURRELEKTRONIK	7014-12341-2140500
-184U10	1	4.22.01.122.023	INTEG.MOD.KINETIX (Safety)	ALLEN BRADLEY	2094-BC01-M01-S
-184U10	1	4.03.11.122.036	CONNECTOR E/S KINETIX (26p)	ALLEN BRADLEY	2090-K6CK-D26M
-184U10	1	4.22.01.122.024	POWER RACK 4 AXIS	ALLEN BRADLEY	2094-PRS4
-184U10	1	4.03.10.017.004	CABLE FOR FIBER OPTICAL (1m)	ALLEN BRADLEY	2090-SCEP1-0
-184U10	1	4.03.11.122.063	CONEC. FEEDBACK KINETIX (15p)	ALLEN BRADLEY	2090-K6CK-D15M
-184Z1	1	4.06.05.316.001	FILTRE RED III 600V / UL (55A)	no definido	FIN538S1.055.M
-185M1	1	4.03.11.122.066	MOTOR CABLE for MP (15m)	ALLEN BRADLEY	2090-CPBM7DF-16AA15 (2090-0000000000750)
-185M1	1	4.03.11.122.067	RESOLVER CABLE (15m)	ALLEN BRADLEY	2090-CFBM7DF-CEAA15 (2090-0000000000705)
-185Q10	1	4.09.02.017.019	MAIN SWITCH 25A (Back Cabinet)	ALLEN BRADLEY	194E-A25-1753
-185Q10	1	4.09.02.017.021	SWITCH BOX (194E-A)	ALLEN BRADLEY	194L-G3572
-185Q10	1	4.09.02.017.020	AUX.CONTACT NO+NC (194E-A)	ALLEN BRADLEY	194E-AP11
-185Q10	1	4.09.02.017.022	GROUND FOR SWITCH BOX (194E-A)	ALLEN BRADLEY	194E-G3653
-185Q10	1	4.09.02.017.023	ACCESSORY SAFETY SWITCH	ALLEN BRADLEY	194L-HE6G-175
-185S1	1	4.04.03.001.010	IND.M12(PNP)(C/M12)4mm NO	OMRON	E2A-M12KS04-M1-B1
-185S1	1	4.03.11.119.107	CONNECTOR M12 4p.90‖ 5mts.	MURRELEKTRONIK	7014-12341-2140500
-185U10	1	4.22.01.122.030	AXIS MODULE KINETIX	ALLEN BRADLEY	2094-BMP5-S
-185U10	1	4.03.11.122.036	CONNECTOR E/S KINETIX (26p)	ALLEN BRADLEY	2090-K6CK-D26M
-185U10	1	4.03.10.017.006	CABLE FOR FIBER OPTICAL (0,1m)	ALLEN BRADLEY	2090-SCEP0-1
-185U10	1	4.03.11.122.063	CONEC. FEEDBACK KINETIX (15p)	ALLEN BRADLEY	2090-K6CK-D15M
-186M1	1	4.03.11.122.066	MOTOR CABLE for MP (15m)	ALLEN BRADLEY	2090-CPBM7DF-16AA15 (2090-0000000000750)
-186M1	1	4.03.11.122.067	RESOLVER CABLE (15m)	ALLEN BRADLEY	2090-CFBM7DF-CEAA15 (2090-0000000000705)
-186Q10	1	4.09.02.017.019	MAIN SWITCH 25A (Back Cabinet)	ALLEN BRADLEY	194E-A25-1753
-186Q10	1	4.09.02.017.021	SWITCH BOX (194E-A)	ALLEN BRADLEY	194L-G3572

POSITION	QUANTITY	CODE	PART DESIGN	MANUFACTURER	MANUFACTURER REFERENCE
-186Q10	1	4.09.02.017.020	AUX.CONTACT NO+NC (194E-A)	ALLEN BRADLEY	194E-AP11
-186Q10	1	4.09.02.017.022	GROUND FOR SWITCH BOX (194E-A)	ALLEN BRADLEY	194E-G3653
-186Q10	1	4.09.02.017.023	ACCESSORY SAFETY SWITCH	ALLEN BRADLEY	194L-HE6G-175
-186S1	1	4.04.03.001.010	IND.M12(PNP)(C/M12)4mm NO	OMRON	E2A-M12KS04-M1-B1
-186S1	1	4.03.11.119.107	CONNECTOR M12 4p.90‖ 5mts.	MURRELEKTRONIK	7014-12341-2140500
-186U10	1	4.22.01.122.030	AXIS MODULE KINETIX	ALLEN BRADLEY	2094-BMP5-S
-186U10	1	4.03.11.122.036	CONNECTOR E/S KINETIX (26p)	ALLEN BRADLEY	2090-K6CK-D26M
-186U10	1	4.03.10.017.006	CABLE FOR FIBER OPTICAL (0,1m)	ALLEN BRADLEY	2090-SCEP0-1
-186U10	1	4.03.11.122.063	CONEC. FEEDBACK KINETIX (15p)	ALLEN BRADLEY	2090-K6CK-D15M
-187M1	1	4.03.11.122.066	MOTOR CABLE for MP (15m)	ALLEN BRADLEY	2090-CPBM7DF-16AA15 (2090-0000000000750)
-187M1	1	4.03.11.122.067	RESOLVER CABLE (15m)	ALLEN BRADLEY	2090-CFBM7DF-CEAA15 (2090-0000000000705)
-187Q10	1	4.09.02.017.019	MAIN SWITCH 25A (Back Cabinet)	ALLEN BRADLEY	194E-A25-1753
-187Q10	1	4.09.02.017.021	SWITCH BOX (194E-A)	ALLEN BRADLEY	194L-G3572
-187Q10	1	4.09.02.017.020	AUX.CONTACT NO+NC (194E-A)	ALLEN BRADLEY	194E-AP11
-187Q10	1	4.09.02.017.022	GROUND FOR SWITCH BOX (194E-A)	ALLEN BRADLEY	194E-G3653
-187Q10	1	4.09.02.017.023	ACCESSORY SAFETY SWITCH	ALLEN BRADLEY	194L-HE6G-175
-187S1	1	4.04.03.001.010	IND.M12(PNP)(C/M12)4mm NO	OMRON	E2A-M12KS04-M1-B1
-187S1	1	4.03.11.119.107	CONNECTOR M12 4p.90‖ 5mts.	MURRELEKTRONIK	7014-12341-2140500
-187U10	1	4.22.01.122.030	AXIS MODULE KINETIX	ALLEN BRADLEY	2094-BMP5-S
-187U10	1	4.03.11.122.036	CONNECTOR E/S KINETIX (26p)	ALLEN BRADLEY	2090-K6CK-D26M
-187U10	1	4.03.10.017.016	CABLE FOR FIBER OPTICAL (5m)	ALLEN BRADLEY	2090-SCEP5-0
-187U10	1	4.03.11.122.063	CONEC. FEEDBACK KINETIX (15p)	ALLEN BRADLEY	2090-K6CK-D15M
-190K1	1	4.18.02.005.008	MODULE SAFETY (2NC+3NCT) Cat.4.	SCHNEIDER	XPS-ATE5110P
-190K2	1	4.18.02.001.015	RELAY SAFETY EMERGENCY	OMRON	G7SA-5A1B
-190K2	1	4.02.01.001.006	BASE RELAY SAFETY c/LED	OMRON	P7SA-14F-ND
-190K3	1	4.18.02.001.015	RELAY SAFETY EMERGENCY	OMRON	G7SA-5A1B
-190K3	1	4.02.01.001.006	BASE RELAY SAFETY c/LED	OMRON	P7SA-14F-ND
-190K10	1	4.03.06.005.042	STARTER CONTACTOR 24VDC (32A) SL	SCHNEIDER	LC1-D323-BD
-190K11	1	4.03.06.005.036	STARTER CONTACTOR 24VDC (18A)TeS	SCHNEIDER	LC1-D183-BL
-190X1	1	4.03.11.098.003	HOOD 16p M32 Side "T-Type"	ILME	TMAO 16.32

POSITION	QUANTITY	CODE	PART DESIGN	MANUFACTURER	MANUFACTURER REFERENCE
-190X1	1	4.03.11.098.007	HOUSING 16p "T-Type"	ILME	TCHI 16
-190X1	1	E.03.11.098.027	CONNECTOR MALE 40 (pins)	ILME	CDM 40
-190X1	1	E.03.11.098.028	CONNECTOR FEMALE 40 (pins)	ILME	CDF 40
-190X1	30	4.03.11.012.030	CONTACT 1mm MALE (Pin)	HARTING	09 15 000 6102
-190X1	30	4.03.11.012.031	CONTACT 1mm FEMALE (Pin)	HARTING	09 15 000 6202
-190X2	1	4.03.11.098.004	HOOD 24p M40 Side "T-Type"	ILME	TMAO 24.40
-190X2	1	4.03.11.098.008	HOUSING 24p "T-Type"	ILME	TCHI 24
-190X2	1	4.03.11.098.014	MALE CONECTOR 24p. CSH	ILME	CSHM 24
-190X2	1	4.03.11.098.018	FEMALE CONECTOR 24p. CSH	ILME	CSHF 24
-190X3	1	4.03.11.012.235	MALE CONNECTOR HAN-DD12 (QL)	HARTING	09 14 012 2632
-190X3	1	4.03.11.012.236	FEMALE CONNECTOR HAN-DD12 (QL)	HARTING	09 14 012 2732
-190X3	1	4.03.11.098.001	HOOD 6p M25 Side "T-Type"	ILME	TMAO 06 L25
-190X3	1	4.03.11.098.038	HOUSING SURFACE 6p "T-Type"	ILME	TMAP 06 L25
-190X3	1	4.03.11.098.019	COVER 6p "T-Type"	ILME	TCHC 06 L
-190X3	1	4.03.11.012.225	ADAPTER HOOD HAN-MOD (H6)	HARTING	09 14 006 0303
-190X3	1	4.03.11.012.244	ADAPTER HOUSING HAN-MOD (H6)	HARTING	09 14 006 0313
-190X4	1	4.03.11.098.004	HOOD 24p M40 Side "T-Type"	ILME	TMAO 24.40
-190X4	1	4.03.11.098.008	HOUSING 24p "T-Type"	ILME	TCHI 24
-190X4	1	4.03.11.098.014	MALE CONECTOR 24p. CSH	ILME	CSHM 24
-190X4	1	4.03.11.098.018	FEMALE CONECTOR 24p. CSH	ILME	CSHF 24
-190X13	1	4.03.11.098.003	HOOD 16p M32 Side "T-Type"	ILME	TMAO 16.32
-190X13	1	4.03.11.098.007	HOUSING 16p "T-Type"	ILME	TCHI 16
-190X13	1	4.03.11.098.013	MALE CONECTOR 16p. CSH	ILME	CSHM 16
-190X13	1	4.03.11.098.017	FEMALE CONECTOR 16p. CSH	ILME	CSHF 16
-190Y0	1	4.03.11.119.107	CONNECTOR M12 4p.90‖ 5mts.	MURRELEKTRONIK	7014-12341-2140500
-191S1	1	4.16.06.005.021	EMERGENCY STOP Ï40mm	SCHNEIDER	ZB4 BS844
-191S1	1	4.03.02.005.022	CONTACT BLOCK (NC) Style 4	SCHNEIDER	ZB4 BZ102
-191S1	1	4.03.02.005.026	CONTACT (NC) Style 4	SCHNEIDER	ZBE 102
-191S1	1	4.05.04.048.006	EMERGENCY PRINTED BOARD	AGUT	080XTGR
-191S2	1	4.16.06.005.021	EMERGENCY STOP Ï40mm	SCHNEIDER	ZB4 BS844

POSITION	QUANTITY	CODE	PART DESIGN	MANUFACTURER	MANUFACTURER REFERENCE
-191S2	1	4.03.02.005.022	CONTACT BLOCK (NC) Style 4	SCHNEIDER	ZB4 BZ102
-191S2	1	4.03.02.005.026	CONTACT (NC) Style 4	SCHNEIDER	ZBE 102
-191S3	1	4.16.06.005.021	EMERGENCY STOP Ï40mm	SCHNEIDER	ZB4 BS844
-191S3	1	4.03.02.005.022	CONTACT BLOCK (NC) Style 4	SCHNEIDER	ZB4 BZ102
-191S3	1	4.03.02.005.026	CONTACT (NC) Style 4	SCHNEIDER	ZBE 102
-191S4	1	4.16.06.005.021	EMERGENCY STOP Ï40mm	SCHNEIDER	ZB4 BS844
-191S4	1	4.03.02.005.022	CONTACT BLOCK (NC) Style 4	SCHNEIDER	ZB4 BZ102
-191S4	1	4.03.02.005.026	CONTACT (NC) Style 4	SCHNEIDER	ZBE 102
-191S5	1	4.16.06.005.021	EMERGENCY STOP Ï40mm	SCHNEIDER	ZB4 BS844
-191S5	1	4.03.02.005.022	CONTACT BLOCK (NC) Style 4	SCHNEIDER	ZB4 BZ102
-191S5	1	4.03.02.005.026	CONTACT (NC) Style 4	SCHNEIDER	ZBE 102
-191S5	1	4.05.04.048.006	EMERGENCY PRINTED BOARD	AGUT	080XTGR
-191S6	1	4.16.06.005.021	EMERGENCY STOP Ï40mm	SCHNEIDER	ZB4 BS844
-191S6	1	4.03.02.005.022	CONTACT BLOCK (NC) Style 4	SCHNEIDER	ZB4 BZ102
-191S6	1	4.03.02.005.026	CONTACT (NC) Style 4	SCHNEIDER	ZBE 102
-191S7	1	4.16.06.005.021	EMERGENCY STOP Ï40mm	SCHNEIDER	ZB4 BS844
-191S7	1	4.03.02.005.022	CONTACT BLOCK (NC) Style 4	SCHNEIDER	ZB4 BZ102
-191S7	1	4.03.02.005.026	CONTACT (NC) Style 4	SCHNEIDER	ZBE 102
-191S8	1	4.16.06.005.021	EMERGENCY STOP Ï40mm	SCHNEIDER	ZB4 BS844
-191S8	1	4.03.02.005.022	CONTACT BLOCK (NC) Style 4	SCHNEIDER	ZB4 BZ102
-191S8	1	4.03.02.005.026	CONTACT (NC) Style 4	SCHNEIDER	ZBE 102
-191S11	1	4.16.06.005.021	EMERGENCY STOP Ï40mm	SCHNEIDER	ZB4 BS844
-191S11	1	4.03.02.005.022	CONTACT BLOCK (NC) Style 4	SCHNEIDER	ZB4 BZ102
-191S11	1	4.03.02.005.026	CONTACT (NC) Style 4	SCHNEIDER	ZBE 102
-191S11	1	4.05.04.048.006	EMERGENCY PRINTED BOARD	AGUT	080XTGR
-191S12	1	4.16.06.005.021	EMERGENCY STOP Ï40mm	SCHNEIDER	ZB4 BS844
-191S12	1	4.03.02.005.022	CONTACT BLOCK (NC) Style 4	SCHNEIDER	ZB4 BZ102
-191S12	1	4.03.02.005.026	CONTACT (NC) Style 4	SCHNEIDER	ZBE 102
-192A1	1	4.16.06.266.004	ENABLING SWITCH	EUCHNER	ZSB2A4G06A-C2302 (110031)
-192K1	1	4.18.02.001.011	AUX.RELAY 24VDC (4 cont.)	OMRON	MY4 IN1-D2 24VD (S)

POSITION	QUANTITY	CODE	PART DESIGN	MANUFACTURER	MANUFACTURER REFERENCE
-192K1	1	E.02.01.001.004	SOCKET RELAY PYF 14S	OMRON	PYF 14S
-192K2	1	4.18.02.001.011	AUX.RELAY 24VDC (4 cont.)	OMRON	MY4 IN1-D2 24VD (S)
-192K2	1	E.02.01.001.004	SOCKET RELAY PYF 14S	OMRON	PYF 14S
-192K12	1	4.18.02.001.011	AUX.RELAY 24VDC (4 cont.)	OMRON	MY4 IN1-D2 24VD (S)
-192K12	1	E.02.01.001.004	SOCKET RELAY PYF 14S	OMRON	PYF 14S
-192S2	1	4.16.06.005.024	YELLOW LIGHT PUSHBUTTOM	SCHNEIDER	ZB4 BW353
-192S2	1	4.03.02.005.030	YELLOW LED	SCHNEIDER	ZB4 BVB5
-192S2	1	4.03.02.005.025	CONTACT (NO) Style 4	SCHNEIDER	ZBE 101
-192S2	1	4.05.04.005.002	LABEL SUPPORT 30x50mm	SCHNEIDER	ZBZ-33
-192S3	1	4.16.06.005.024	YELLOW LIGHT PUSHBUTTOM	SCHNEIDER	ZB4 BW353
-192S3	1	4.03.02.005.030	YELLOW LED	SCHNEIDER	ZB4 BVB5
-192S3	1	4.03.02.005.025	CONTACT (NO) Style 4	SCHNEIDER	ZBE 101
-192S3	1	4.05.04.005.002	LABEL SUPPORT 30x50mm	SCHNEIDER	ZBZ-33
-192S4	1	4.16.06.005.024	YELLOW LIGHT PUSHBUTTOM	SCHNEIDER	ZB4 BW353
-192S4	1	4.03.02.005.030	YELLOW LED	SCHNEIDER	ZB4 BVB5
-192S4	1	4.03.02.005.025	CONTACT (NO) Style 4	SCHNEIDER	ZBE 101
-192S4	1	4.05.04.005.002	LABEL SUPPORT 30x50mm	SCHNEIDER	ZBZ-33
-192S5	1	4.16.06.005.024	YELLOW LIGHT PUSHBUTTOM	SCHNEIDER	ZB4 BW353
-192S5	1	4.03.02.005.030	YELLOW LED	SCHNEIDER	ZB4 BVB5
-192S5	1	4.03.02.005.025	CONTACT (NO) Style 4	SCHNEIDER	ZBE 101
-192S5	1	4.03.02.005.026	CONTACT (NC) Style 4	SCHNEIDER	ZBE 102
-192S5	1	4.05.04.005.002	LABEL SUPPORT 30x50mm	SCHNEIDER	ZBZ-33
-192S6	1	4.16.06.005.024	YELLOW LIGHT PUSHBUTTOM	SCHNEIDER	ZB4 BW353
-192S6	1	4.03.02.005.030	YELLOW LED	SCHNEIDER	ZB4 BVB5
-192S6	1	4.03.02.005.025	CONTACT (NO) Style 4	SCHNEIDER	ZBE 101
-192S6	1	4.05.04.005.002	LABEL SUPPORT 30x50mm	SCHNEIDER	ZBZ-33
-193K1	1	4.18.02.005.006	EMERGENCY RELAY (2NC) Cat.3	SCHNEIDER	XPS-DMB1132P
-193K2	1	4.18.02.001.015	RELAY SAFETY EMERGENCY	OMRON	G7SA-5A1B
-193K2	1	4.02.01.001.006	BASE RELAY SAFETY c/LED	OMRON	P7SA-14F-ND
-193K3	1	4.18.02.001.015	RELAY SAFETY EMERGENCY	OMRON	G7SA-5A1B

POSITION	QUANTITY	CODE	PART DESIGN	MANUFACTURER	MANUFACTURER REFERENCE
-193K3	1	4.02.01.001.006	BASE RELAY SAFETY c/LED	OMRON	P7SA-14F-ND
-193K10	1	4.18.02.005.008	MODULE SAFETY (2NC+3NCT) Cat.4.	SCHNEIDER	XPS-ATE5110P
-193K11	1	4.18.02.005.006	EMERGENCY RELAY (2NC) Cat.3	SCHNEIDER	XPS-DMB1132P
-193K20	1	4.18.02.001.015	RELAY SAFETY EMERGENCY	OMRON	G7SA-5A1B
-193K20	1	4.02.01.001.006	BASE RELAY SAFETY c/LED	OMRON	P7SA-14F-ND
-193K21	1	4.18.02.001.015	RELAY SAFETY EMERGENCY	OMRON	G7SA-5A1B
-193K21	1	4.02.01.001.006	BASE RELAY SAFETY c/LED	OMRON	P7SA-14F-ND
-193K22	1	4.18.02.001.015	RELAY SAFETY EMERGENCY	OMRON	G7SA-5A1B
-193K22	1	4.02.01.001.006	BASE RELAY SAFETY c/LED	OMRON	P7SA-14F-ND
-193K31	1	4.18.02.001.015	RELAY SAFETY EMERGENCY	OMRON	G7SA-5A1B
-193K31	1	4.02.01.001.006	BASE RELAY SAFETY c/LED	OMRON	P7SA-14F-ND
-193K32	1	4.18.02.001.015	RELAY SAFETY EMERGENCY	OMRON	G7SA-5A1B
-193K32	1	4.02.01.001.006	BASE RELAY SAFETY c/LED	OMRON	P7SA-14F-ND
-193S20	1	4.19.01.005.022	KEY SELECTOR SWITCH 2p.(ky-455)	SCHNEIDER	ZB4 BG2
-193S20	1	4.03.02.005.021	CONTACT BLOCK (NO) Style 4	SCHNEIDER	ZB4 BZ101
-193S20	1	4.03.02.005.026	CONTACT (NC) Style 4	SCHNEIDER	ZBE 102
-193S20	1	4.03.02.005.026	CONTACT (NC) Style 4	SCHNEIDER	ZBE 102
-193S20	1	4.05.04.005.002	LABEL SUPPORT 30x50mm	SCHNEIDER	ZBZ-33
-193X1	1	4.03.11.098.003	HOOD 16p M32 Side "T-Type"	ILME	TMAO 16.32
-193X1	1	4.03.11.098.007	HOUSING 16p "T-Type"	ILME	TCHI 16
-193X1	1	4.03.11.098.013	MALE CONECTOR 16p. CSH	ILME	CSHM 16
-193X1	1	4.03.11.098.017	FEMALE CONECTOR 16p. CSH	ILME	CSHF 16
-193X2	1	4.03.11.098.042	HOOD 24p M32 Side "T-Type"	ILME	TMAO 24.32
-193X2	1	4.03.11.098.008	HOUSING 24p "T-Type"	ILME	TCHI 24
-193X2	1	E.03.11.098.050	CONNECTOR MALE 46 (pins)	ILME	CQEM 46
-193X2	1	E.03.11.098.049	CONNECTOR FEMALE 46 (pins)	ILME	CQEF 46
-194S1	1	4.09.06.005.004	MAGNETIC SWITCH SAFETY (2NC+1NO	SCHNEIDER	XCS-DMP500L01M12
-194S1	1	4.03.11.005.001	CONNECTOR M12 8p. 10mt.	SCHNEIDER	XZ CP29P11L10
-194S2	1	4.09.06.005.004	MAGNETIC SWITCH SAFETY (2NC+1NO	SCHNEIDER	XCS-DMP500L01M12
-194S2	1	4.03.11.005.001	CONNECTOR M12 8p. 10mt.	SCHNEIDER	XZ CP29P11L10

POSITION	QUANTITY	CODE	PART DESIGN	MANUFACTURER	MANUFACTURER REFERENCE
-194S3	1	4.09.06.005.004	MAGNETIC SWITCH SAFETY (2NC+1NO	SCHNEIDER	XCS-DMP500L01M12
-194S3	1	4.03.11.005.001	CONNECTOR M12 8p. 10mt.	SCHNEIDER	XZ CP29P11L10
-194S4	1	4.09.06.005.004	MAGNETIC SWITCH SAFETY (2NC+1NO	SCHNEIDER	XCS-DMP500L01M12
-194S4	1	4.03.11.005.001	CONNECTOR M12 8p. 10mt.	SCHNEIDER	XZ CP29P11L10
-194S7	1	4.09.06.005.003	MAGNETIC SWITCH SAFETY (2NC+1NO	SCHNEIDER	XCS-DMP5005
-194S11	1	4.09.06.005.003	MAGNETIC SWITCH SAFETY (2NC+1NO	SCHNEIDER	XCS-DMP5005
-194S13	1	4.09.06.005.003	MAGNETIC SWITCH SAFETY (2NC+1NO	SCHNEIDER	XCS-DMP5005
-195S1	1	4.09.06.013.002	MAGNETIC SWITCH W/LOCK	PILZ	PSEN sl-0,5p 2.1 unit (fully coded) (Cod.570501)
-195S1	1	4.03.11.013.001	CONNECTOR M12/8p.	PILZ	Conector M12 / 8 polos para PSENlock
-196S1	1	4.19.01.005.023	KEY SELECTOR 2 Pos	SCHNEIDER	ZB4 BG412
-196S1	1	4.03.02.005.022	CONTACT BLOCK (NC) Style 4	SCHNEIDER	ZB4 BZ102
-196S1	1	4.03.02.005.025	CONTACT (NO) Style 4	SCHNEIDER	ZBE 101
-196S1	1	4.03.02.005.026	CONTACT (NC) Style 4	SCHNEIDER	ZBE 102
-196S1	1	4.03.02.005.026	CONTACT (NC) Style 4	SCHNEIDER	ZBE 102
-196S1	1	4.03.02.005.026	CONTACT (NC) Style 4	SCHNEIDER	ZBE 102
-196S1	1	4.05.04.005.002	LABEL SUPPORT 30x50mm	SCHNEIDER	ZBZ-33
-196X0	1	4.03.11.098.003	HOOD 16p M32 Side "T-Type"	ILME	TMAO 16.32
-196X0	1	4.03.11.098.007	HOUSING 16p "T-Type"	ILME	TCHI 16
-196X0	1	4.03.11.098.013	MALE CONECTOR 16p. CSH	ILME	CSHM 16
-196X0	1	4.03.11.098.017	FEMALE CONECTOR 16p. CSH	ILME	CSHF 16
-198S1	1	4.09.06.005.004	MAGNETIC SWITCH SAFETY (2NC+1NO	SCHNEIDER	XCS-DMP500L01M12
-198S1	1	4.03.11.005.001	CONNECTOR M12 8p. 10mt.	SCHNEIDER	XZ CP29P11L10
-198S2	1	4.09.06.005.004	MAGNETIC SWITCH SAFETY (2NC+1NO	SCHNEIDER	XCS-DMP500L01M12
-198S2	1	4.03.11.005.001	CONNECTOR M12 8p. 10mt.	SCHNEIDER	XZ CP29P11L10
-200A0	1	4.01.02.017.018	ControlLogix RACK 17 SLOTS	ALLEN BRADLEY	1756-A17
-200A1	1	4.01.02.017.039	POWER SUPPLY CLX 13A	ALLEN BRADLEY	1756-PA75
-200A2	1	4.01.02.017.087	CPU Controllogix (2Mb)	ALLEN BRADLEY	1756-L71
-200A3	1	4.01.02.017.041	ControlLogix 8/AXIS (SERCOS) MO	ALLEN BRADLEY	1756-M08SE
-200A5	1	4.01.02.017.012	ControlLogix SPARE MODUL	ALLEN BRADLEY	1756-N2
-200A6	1	4.01.02.017.020	ETHERNET MODULE	ALLEN BRADLEY	1756-ENBT

POSITION	QUANTITY	CODE	PART DESIGN	MANUFACTURER	MANUFACTURER REFERENCE
-200A7	1	4.01.02.017.009	ControlLogix SCANNER DEVICENET	ALLEN BRADLEY	1756-DNB
-200A9	1	4.01.02.017.012	ControlLogix SPARE MODUL	ALLEN BRADLEY	1756-N2
-200A10	1	4.01.02.017.070	RACK ControlLogix 7 SLOTS	ALLEN BRADLEY	1756-A7
-200A11	1	4.01.02.017.002	ControlLogix POWER SUPPLY	ALLEN BRADLEY	1756-PA72
-200A12	1	4.01.02.017.012	ControlLogix SPARE MODUL	ALLEN BRADLEY	1756-N2
-201A2	1	4.01.02.017.020	ETHERNET MODULE	ALLEN BRADLEY	1756-ENBT
-201A3	1	4.01.02.001.185	ETHERNET ROUTER 24VDC	OMRON	ED-210 (24Vdc)
-201A3	6	4.03.11.128.001	CONNECTOR MALE RJ-45	CAROL Industria	ING 1205
-201A4	1	4.01.02.017.020	ETHERNET MODULE	ALLEN BRADLEY	1756-ENBT
-201D1	1	4.16.02.017.011	TOUCH SCREEN 12"	ALLEN BRADLEY	2711P-T12C4D9
-201EV1	1	4.22.03.011.033	CABINET FAN (116mm) 24V	RITTAL	SK 3237.124(SK 3321.027)
-201EV1	1	4.22.03.011.021	FUN FILTER (116mm)	RITTAL	SK 3237.200 (SK 3321.207)
-201X2	1	4.03.11.290.001	CONNECTOR MALE CAGE-CLAMP 3p+T	WAGO	721-604 / 000-042
-201X2	1	4.03.11.290.002	CONNECTOR FEMALE CAGE-CLAMP 3p+T	WAGO	721-104 / 026-045
-202A1	1	7.07.0620.002	HEAD-BOARD DEVICENET COMPACT	FESTO	CPX-FB11 DEVICENET 526172
-202A1	1	7.07.0621.002	CONNECTOR FOR MODULE DEVICENET	FESTO	FBS-SUB-9-BU-2X5POL-B 532219
-202A2	1	7.07.0620.002	HEAD-BOARD DEVICENET COMPACT	FESTO	CPX-FB11 DEVICENET 526172
-202A2	1	7.07.0621.002	CONNECTOR FOR MODULE DEVICENET	FESTO	FBS-SUB-9-BU-2X5POL-B 532219
-202A3	1	7.07.0620.002	HEAD-BOARD DEVICENET COMPACT	FESTO	CPX-FB11 DEVICENET 526172
-202A3	1	7.07.0621.002	CONNECTOR FOR MODULE DEVICENET	FESTO	FBS-SUB-9-BU-2X5POL-B 532219
-202A4	1	7.07.0620.002	HEAD-BOARD DEVICENET COMPACT	FESTO	CPX-FB11 DEVICENET 526172
-202A4	1	7.07.0621.002	CONNECTOR FOR MODULE DEVICENET	FESTO	FBS-SUB-9-BU-2X5POL-B 532219
-202R1	1	4.18.04.085.010	RESISTANCE 120 Ohm	RADIO SONDA	120 Ohm 1/4w
-202X1	1	4.03.11.096.008	CONNECTOR DNET / DOUBLE (5 pin)	PHOENIX	TFKC 2,5/5-STF-5,08 Ref.1962723
-203A1	1	4.03.11.119.115	CONNECTOR M12 Male 5p.90‖ s/c	MURRELEKTRONIK	7004-12881-0000000
-203A1	1	4.03.11.119.116	CONNECTOR M12 Female 5p.90¦ s/c	MURRELEKTRONIK	7004-13041-0000000
-203A1	1	4.03.11.119.117	CONNECTOR "T" M12 TRUNK D/Net	MURRELEKTRONIK	Ref.332762
-203A2	1	4.03.11.119.107	CONNECTOR M12 4p.90‖ 5mts.	MURRELEKTRONIK	7014-12341-2140500
-203A2	1	4.03.11.119.104	CONNECTOR M8 4p.5mts.	MURRELEKTRONIK	7014-08061-2110500
-203A2	1	4.03.11.119.115	CONNECTOR M12 Male 5p.90‖ s/c	MURRELEKTRONIK	7004-12881-0000000

POSITION	QUANTITY	CODE	PART DESIGN	MANUFACTURER	MANUFACTURER REFERENCE
-203A2	1	4.03.11.119.116	CONNECTOR M12 Female 5p.90¦ s/c	MURRELEKTRONIK	7004-13041-0000000
-203A2	1	4.03.11.119.117	CONNECTOR "T" M12 TRUNK D/Net	MURRELEKTRONIK	Ref.332762
-210A1	1	4.01.02.017.028	MODULE 32 Inputs PNP	ALLEN BRADLEY	1756-IB32
-210A1	1	4.01.02.017.059	TERM.BLOCK (36 pines) CLAMP	ALLEN BRADLEY	1756-TBS6H
-210S0	1	4.16.06.005.023	GREEN LIGHT PUSHBUTTOM	SCHNEIDER	ZB4 BW333
-210S0	1	4.03.02.005.028	GREEN LED	SCHNEIDER	ZB4 BVB3
-210S0	1	4.03.02.005.025	CONTACT (NO) Style 4	SCHNEIDER	ZBE 101
-210S0	1	4.05.04.005.002	LABEL SUPPORT 30x50mm	SCHNEIDER	ZBZ-33
-210S1	1	4.16.06.005.022	RED LIGHT PUSHBUTTOM	SCHNEIDER	ZB4 BW143
-210S1	1	4.03.02.005.029	RED LED	SCHNEIDER	ZB4 BVB4
-210S1	1	4.03.02.005.026	CONTACT (NC) Style 4	SCHNEIDER	ZBE 102
-210S1	1	4.05.04.005.002	LABEL SUPPORT 30x50mm	SCHNEIDER	ZBZ-33
-210S01	1	4.16.06.005.023	GREEN LIGHT PUSHBUTTOM	SCHNEIDER	ZB4 BW333
-210S01	1	4.03.02.005.028	GREEN LED	SCHNEIDER	ZB4 BVB3
-210S01	1	4.03.02.005.025	CONTACT (NO) Style 4	SCHNEIDER	ZBE 101
-210S01	1	4.05.04.005.002	LABEL SUPPORT 30x50mm	SCHNEIDER	ZBZ-33
-210S02	1	4.16.06.005.023	GREEN LIGHT PUSHBUTTOM	SCHNEIDER	ZB4 BW333
-210S02	1	4.03.02.005.028	GREEN LED	SCHNEIDER	ZB4 BVB3
-210S02	1	4.03.02.005.025	CONTACT (NO) Style 4	SCHNEIDER	ZBE 101
-210S02	1	4.05.04.005.002	LABEL SUPPORT 30x50mm	SCHNEIDER	ZBZ-33
-210S03	1	4.16.06.005.023	GREEN LIGHT PUSHBUTTOM	SCHNEIDER	ZB4 BW333
-210S03	1	4.03.02.005.028	GREEN LED	SCHNEIDER	ZB4 BVB3
-210S03	1	4.03.02.005.025	CONTACT (NO) Style 4	SCHNEIDER	ZBE 101
-210S03	1	4.05.04.005.002	LABEL SUPPORT 30x50mm	SCHNEIDER	ZBZ-33
-210S11	1	4.16.06.005.022	RED LIGHT PUSHBUTTOM	SCHNEIDER	ZB4 BW143
-210S11	1	4.03.02.005.029	RED LED	SCHNEIDER	ZB4 BVB4
-210S11	1	4.03.02.005.026	CONTACT (NC) Style 4	SCHNEIDER	ZBE 102
-210S11	1	4.05.04.005.002	LABEL SUPPORT 30x50mm	SCHNEIDER	ZBZ-33
-210S21	1	4.16.06.005.022	RED LIGHT PUSHBUTTOM	SCHNEIDER	ZB4 BW143
-210S21	1	4.03.02.005.029	RED LED	SCHNEIDER	ZB4 BVB4

POSITION	QUANTITY	CODE	PART DESIGN	MANUFACTURER	MANUFACTURER REFERENCE
-210S21	1	4.03.02.005.026	CONTACT (NC) Style 4	SCHNEIDER	ZBE 102
-210S21	1	4.05.04.005.002	LABEL SUPPORT 30x50mm	SCHNEIDER	ZBZ-33
-210S31	1	4.16.06.005.022	RED LIGHT PUSHBUTTOM	SCHNEIDER	ZB4 BW143
-210S31	1	4.03.02.005.029	RED LED	SCHNEIDER	ZB4 BVB4
-210S31	1	4.03.02.005.026	CONTACT (NC) Style 4	SCHNEIDER	ZBE 102
-210S31	1	4.05.04.005.002	LABEL SUPPORT 30x50mm	SCHNEIDER	ZBZ-33
-211S4	1	4.03.11.119.102	CONNECTOR M8 3p. 5mts.	MURRELEKTRONIK	7014-08041-2100500
-211S7	1	4.19.01.005.025	KEY SELECTOR Nº520 2p.(Left-Rig)	SCHNEIDER	ZB4 BG414
-211S7	1	4.03.02.005.021	CONTACT BLOCK (NO) Style 4	SCHNEIDER	ZB4 BZ101
-211S7	1	4.05.04.005.002	LABEL SUPPORT 30x50mm	SCHNEIDER	ZBZ-33
-212A7	1	E.16.09.011.001	THERMOSTAT FOR CABINET	RITTAL	SK 3110.000
-212S3	1	4.19.01.005.033	SELECTOR 3 pos.(L:Sens R:Sens)	SCHNEIDER	ZB4 BD5
-212S3	1	4.03.02.005.021	CONTACT BLOCK (NO) Style 4	SCHNEIDER	ZB4 BZ101
-212S3	1	4.03.02.005.025	CONTACT (NO) Style 4	SCHNEIDER	ZBE 101
-212S3	1	4.05.04.005.002	LABEL SUPPORT 30x50mm	SCHNEIDER	ZBZ-33
-212S5	1	4.19.01.005.033	SELECTOR 3 pos.(L:Sens R:Sens)	SCHNEIDER	ZB4 BD5
-212S5	1	4.03.02.005.021	CONTACT BLOCK (NO) Style 4	SCHNEIDER	ZB4 BZ101
-212S5	1	4.03.02.005.025	CONTACT (NO) Style 4	SCHNEIDER	ZBE 101
-212S5	1	4.05.04.005.002	LABEL SUPPORT 30x50mm	SCHNEIDER	ZBZ-33
-213S0	1	4.19.01.005.033	SELECTOR 3 pos.(L:Sens R:Sens)	SCHNEIDER	ZB4 BD5
-213S0	1	4.03.02.005.021	CONTACT BLOCK (NO) Style 4	SCHNEIDER	ZB4 BZ101
-213S0	1	4.03.02.005.025	CONTACT (NO) Style 4	SCHNEIDER	ZBE 101
-213S0	1	4.05.04.005.002	LABEL SUPPORT 30x50mm	SCHNEIDER	ZBZ-33
-214A1	1	4.01.02.017.028	MODULE 32 Inputs PNP	ALLEN BRADLEY	1756-IB32
-214A1	1	4.01.02.017.059	TERM.BLOCK (36 pines) CLAMP	ALLEN BRADLEY	1756-TBS6H
-214S0	1	4.03.11.119.104	CONNECTOR M8 4p.5mts.	MURRELEKTRONIK	7014-08061-2110500
-214S0	1	4.03.11.012.154	CONNECTOR M8 "HARAX"	HARTING	21 02 151 1405
-214S1	1	4.03.11.119.104	CONNECTOR M8 4p.5mts.	MURRELEKTRONIK	7014-08061-2110500
-214S1	1	4.03.11.012.154	CONNECTOR M8 "HARAX"	HARTING	21 02 151 1405
-214S6	1	4.19.01.005.021	SELECTOR sWITCH 2pos. Style 4	SCHNEIDER	ZB4 BD2

POSITION	QUANTITY	CODE	PART DESIGN	MANUFACTURER	MANUFACTURER REFERENCE
-214S6	1	4.03.02.005.021	CONTACT BLOCK (NO) Style 4	SCHNEIDER	ZB4 BZ101
-214S6	1	4.05.04.005.002	LABEL SUPPORT 30x50mm	SCHNEIDER	ZBZ-33
-215S7	1	4.03.11.119.102	CONNECTOR M8 3p. 5mts.	MURRELEKTRONIK	7014-08041-2100500
-218A1	1	4.01.02.017.007	ControlLogix 8 INP.ANALOG MODUL	ALLEN BRADLEY	1756-IF8
-218A1	1	4.01.02.017.059	TERM.BLOCK (36 pines) CLAMP	ALLEN BRADLEY	1756-TBS6H
-218S4	1	4.04.03.286.038	LEVEL DETECTOR Long:610mm (4-20	VEGA	VEGAFLEX 83 FX83.FAFLMTHXKMAM L=610mm OF.4028623/1.1 Pos
-218S5	1				
-218X4	1	4.03.11.012.227	MALE CONNECTOR HAN-A4 (Black)	HARTING	09 20 004 2633
-218X4	1	4.03.11.012.228	FEMALE CONNECTOR HAN-A4	HARTING	09 20 004 2733
-218X4	1	4.03.11.012.125	CONNECTOR COVER 7 poles M20 Side	HARTING	19 20 003 0620
-218X4	1	4.03.11.012.055	CONNECTOR SOCKET (PVC)	HARTING	09 20 003 0320
-219A1	1	4.01.02.017.074	ANALOG MODULE 8 OUTPUTS	ALLEN BRADLEY	1756 - OF8
-219A1	1	4.01.02.017.075	TERM.BLOCK (20 pines) CLAMP	ALLEN BRADLEY	1756-TBSH
-220A1	1	4.01.02.017.029	MODULE 32 Outputs PNP	ALLEN BRADLEY	1756-OB32
-220A1	1	4.01.02.017.059	TERM.BLOCK (36 pines) CLAMP	ALLEN BRADLEY	1756-TBS6H
-220K3	1	4.18.02.001.014	AUX.RELAY 24VDC (2 cont.)	OMRON	MY2 IN1-D2 24VD (S)
-220K3	1	4.02.01.001.005	SOCKET RELAY PYF 08S (CLAMP)	OMRON	PYF 08S BYOMZ
-220K4	1	4.03.06.005.037	STARTER CONTACTOR 24VDC (12A)TeS	SCHNEIDER	LC1-D123-BL
-220K14	1	4.18.02.043.003	RELAY 24VDC (1CO_6A/250V)	WEIDMULLER	8553660000 MRZ 24VDC 1CO
-221K7	1	4.03.06.005.037	STARTER CONTACTOR 24VDC (12A)TeS	SCHNEIDER	LC1-D123-BL
-221K17	1	4.18.02.043.003	RELAY 24VDC (1CO_6A/250V)	WEIDMULLER	8553660000 MRZ 24VDC 1CO
-222K2	1	4.18.02.001.011	AUX.RELAY 24VDC (4 cont.)	OMRON	MY4 IN1-D2 24VD (S)
-222K2	1	E.02.01.001.004	SOCKET RELAY PYF 14S	OMRON	PYF 14S
-222K6	1	4.18.02.001.014	AUX.RELAY 24VDC (2 cont.)	OMRON	MY2 IN1-D2 24VD (S)
-222K6	1	4.02.01.001.005	SOCKET RELAY PYF 08S (CLAMP)	OMRON	PYF 08S BYOMZ
-222K7	1	4.18.02.001.014	AUX.RELAY 24VDC (2 cont.)	OMRON	MY2 IN1-D2 24VD (S)
-222K7	1	4.02.01.001.005	SOCKET RELAY PYF 08S (CLAMP)	OMRON	PYF 08S BYOMZ
-223H3	1	4.01.06.126.004	BUZZER 12/24VDC IP-65	WERMA	FERNANDO CARRASCO: Ref.140.150.50 rojo
-223V14	1	4.18.02.043.002	STATIC RELAY 2A	WEIDMULLER	8607370000 MOZ 24VDC/24VDC 2A
-224A1	1	4.01.02.017.029	MODULE 32 Outputs PNP	ALLEN BRADLEY	1756-OB32

POSITION	QUANTITY	CODE	PART DESIGN	MANUFACTURER	MANUFACTURER REFERENCE
-224A1	1	4.01.02.017.059	TERM.BLOCK (36 pines) CLAMP	ALLEN BRADLEY	1756-TBS6H
-224V10	1	4.18.02.043.002	STATIC RELAY 2A	WEIDMULLER	8607370000 MOZ 24VDC/24VDC 2A
-224V11	1	4.18.02.043.002	STATIC RELAY 2A	WEIDMULLER	8607370000 MOZ 24VDC/24VDC 2A
-224V12	1	4.18.02.043.002	STATIC RELAY 2A	WEIDMULLER	8607370000 MOZ 24VDC/24VDC 2A
-224Y2	1	4.03.11.067.011	CONNECTOR WITH CABLE	FESTO	KMEB-1-24-5-LED Ref.:151 689
-224Y4	1	4.03.11.067.102	CONNECTOR WITH LED (Ev. CPE) 5m	FESTO	KMYZ-9-24-5-LED-PUR-B Ref. 193689
-224Y12	1	4.03.11.067.011	CONNECTOR WITH CABLE	FESTO	KMEB-1-24-5-LED Ref.:151 689
-227K1	1	4.18.02.001.014	AUX.RELAY 24VDC (2 cont.)	OMRON	MY2 IN1-D2 24VD (S)
-227K1	1	4.02.01.001.005	SOCKET RELAY PYF 08S (CLAMP)	OMRON	PYF 08S BYOMZ
-228A1	1	4.01.02.017.029	MODULE 32 Outputs PNP	ALLEN BRADLEY	1756-OB32
-228A1	1	4.01.02.017.059	TERM.BLOCK (36 pines) CLAMP	ALLEN BRADLEY	1756-TBS6H
-228K3	1	4.03.06.005.037	STARTER CONTACTOR 24VDC (12A)TeS	SCHNEIDER	LC1-D123-BL
-228K4	1	4.18.02.001.014	AUX.RELAY 24VDC (2 cont.)	OMRON	MY2 IN1-D2 24VD (S)
-228K4	1	4.02.01.001.005	SOCKET RELAY PYF 08S (CLAMP)	OMRON	PYF 08S BYOMZ
-228K5	1	4.18.02.001.014	AUX.RELAY 24VDC (2 cont.)	OMRON	MY2 IN1-D2 24VD (S)
-228K5	1	4.02.01.001.005	SOCKET RELAY PYF 08S (CLAMP)	OMRON	PYF 08S BYOMZ
-228K6	1	4.18.02.001.014	AUX.RELAY 24VDC (2 cont.)	OMRON	MY2 IN1-D2 24VD (S)
-228K6	1	4.02.01.001.005	SOCKET RELAY PYF 08S (CLAMP)	OMRON	PYF 08S BYOMZ
-228K7	1	4.18.02.001.014	AUX.RELAY 24VDC (2 cont.)	OMRON	MY2 IN1-D2 24VD (S)
-228K7	1	4.02.01.001.005	SOCKET RELAY PYF 08S (CLAMP)	OMRON	PYF 08S BYOMZ
-228S3	1	4.09.06.016.033	ACTUATOR MAGN. BNS-16	SCHMERSAL	BPS 16
-228S3	1	4.09.06.016.032	SAFETY SWITCH (Lock)	SCHMERSAL	BNS 16-12zV
-228V10	1	4.18.02.043.002	STATIC RELAY 2A	WEIDMULLER	8607370000 MOZ 24VDC/24VDC 2A
-228Y1	1	4.03.11.067.011	CONNECTOR WITH CABLE	FESTO	KMEB-1-24-5-LED Ref.:151 689
-228Y2	1	4.03.11.067.102	CONNECTOR WITH LED (Ev. CPE) 5m	FESTO	KMYZ-9-24-5-LED-PUR-B Ref. 193689
-229V10	1	4.18.02.043.002	STATIC RELAY 2A	WEIDMULLER	8607370000 MOZ 24VDC/24VDC 2A
-229Y5	1	4.03.11.067.102	CONNECTOR WITH LED (Ev. CPE) 5m	FESTO	KMYZ-9-24-5-LED-PUR-B Ref. 193689
-230K6	1	4.18.02.001.011	AUX.RELAY 24VDC (4 cont.)	OMRON	MY4 IN1-D2 24VD (S)
-230K6	1	E.02.01.001.004	SOCKET RELAY PYF 14S	OMRON	PYF 14S
-230K7	1	4.03.06.005.037	STARTER CONTACTOR 24VDC (12A)TeS	SCHNEIDER	LC1-D123-BL

POSITION	QUANTITY	CODE	PART DESIGN	MANUFACTURER	MANUFACTURER REFERENCE
-230K17	1	4.18.02.043.003	RELAY 24VDC (1CO_6A/250V)	WEIDMULLER	8553660000 MRZ 24VDC 1CO
-231K4	1	4.18.02.001.014	AUX.RELAY 24VDC (2 cont.)	OMRON	MY2 IN1-D2 24VD (S)
-231K4	1	4.02.01.001.005	SOCKET RELAY PYF 08S (CLAMP)	OMRON	PYF 08S BYOMZ
-231K5	1	4.18.02.001.014	AUX.RELAY 24VDC (2 cont.)	OMRON	MY2 IN1-D2 24VD (S)
-231K5	1	4.02.01.001.005	SOCKET RELAY PYF 08S (CLAMP)	OMRON	PYF 08S BYOMZ
-231V10	1	4.18.02.043.002	STATIC RELAY 2A	WEIDMULLER	8607370000 MOZ 24VDC/24VDC 2A
-231Y2	1	4.03.11.067.102	CONNECTOR WITH LED (Ev. CPE) 5m	FESTO	KMYZ-9-24-5-LED-PUR-B Ref. 193689
-231Y3	1	4.03.11.067.102	CONNECTOR WITH LED (Ev. CPE) 5m	FESTO	KMYZ-9-24-5-LED-PUR-B Ref. 193689
-232A1	1	4.01.02.017.028	MODULE 32 Inputs PNP	ALLEN BRADLEY	1756-IB32
-232A1	1	4.01.02.017.059	TERM.BLOCK (36 pines) CLAMP	ALLEN BRADLEY	1756-TBS6H
-232S0	1	4.19.01.005.033	SELECTOR 3 pos.(L:Sens R:Sens)	SCHNEIDER	ZB4 BD5
-232S0	1	4.03.02.005.021	CONTACT BLOCK (NO) Style 4	SCHNEIDER	ZB4 BZ101
-232S0	1	4.03.02.005.025	CONTACT (NO) Style 4	SCHNEIDER	ZBE 101
-232S0	1	4.05.04.005.002	LABEL SUPPORT 30x50mm	SCHNEIDER	ZBZ-33
-232S3	1	4.19.01.005.033	SELECTOR 3 pos.(L:Sens R:Sens)	SCHNEIDER	ZB4 BD5
-232S3	1	4.03.02.005.021	CONTACT BLOCK (NO) Style 4	SCHNEIDER	ZB4 BZ101
-232S3	1	4.03.02.005.025	CONTACT (NO) Style 4	SCHNEIDER	ZBE 101
-232S3	1	4.05.04.005.002	LABEL SUPPORT 30x50mm	SCHNEIDER	ZBZ-33
-233S1	1	4.04.03.001.010	IND.M12(PNP)(C/M12)4mm NO	OMRON	E2A-M12KS04-M1-B1
-233S1	1	4.03.11.119.107	CONNECTOR M12 4p.90‖ 5mts.	MURRELEKTRONIK	7014-12341-2140500
-233S2	1	4.04.03.001.010	IND.M12(PNP)(C/M12)4mm NO	OMRON	E2A-M12KS04-M1-B1
-233S2	1	4.03.11.119.107	CONNECTOR M12 4p.90‖ 5mts.	MURRELEKTRONIK	7014-12341-2140500
-233S5	1	4.16.06.005.025	BLUE LIGHT PUSHBUTTOM	SCHNEIDER	ZB4 BW363
-233S5	1	4.03.02.005.031	BLUE LED	SCHNEIDER	ZB4 BVB6
-233S5	1	4.03.02.005.025	CONTACT (NO) Style 4	SCHNEIDER	ZBE 101
-233S5	1	4.05.04.005.002	LABEL SUPPORT 30x50mm	SCHNEIDER	ZBZ-33
-235B1	1	4.06.03.001.017	PHOTOCELL REFLEX (IP69K)	OMRON	E3ZM-R86
-235B1	1	4.06.03.001.018	REFLECTOR E39-R1S	OMRON	E39-R1S
-235B1	1	4.03.11.119.105	CONNECTOR M8 4p.90‖ 5mts.	MURRELEKTRONIK	7014-08101-2110500
-235S3	1	4.04.03.001.012	IND.M18(PNP)(C/M12)8mm NO	OMRON	E2A-M18KS08-M1-B1

POSITION	QUANTITY	CODE	PART DESIGN	MANUFACTURER	MANUFACTURER REFERENCE
-235S3	1	4.03.11.119.107	CONNECTOR M12 4p.90‖ 5mts.	MURRELEKTRONIK	7014-12341-2140500
-235S5	1	4.04.03.001.014	IND.M18(PNP)(C/M12)8mm NC	OMRON	E2A-M18KS08-M1-B2
-235S5	1	4.03.11.119.107	CONNECTOR M12 4p.90‖ 5mts.	MURRELEKTRONIK	7014-12341-2140500
-236A1	1	4.01.02.017.029	MODULE 32 Outputs PNP	ALLEN BRADLEY	1756-OB32
-236A1	1	4.01.02.017.059	TERM.BLOCK (36 pines) CLAMP	ALLEN BRADLEY	1756-TBS6H
-237V10	1	4.18.02.043.002	STATIC RELAY 2A	WEIDMULLER	8607370000 MOZ 24VDC/24VDC 2A
-237V11	1	4.18.02.043.002	STATIC RELAY 2A	WEIDMULLER	8607370000 MOZ 24VDC/24VDC 2A
-237V12	1	4.18.02.043.002	STATIC RELAY 2A	WEIDMULLER	8607370000 MOZ 24VDC/24VDC 2A
-237V13	1	4.18.02.043.002	STATIC RELAY 2A	WEIDMULLER	8607370000 MOZ 24VDC/24VDC 2A
-237V14	1	4.18.02.043.002	STATIC RELAY 2A	WEIDMULLER	8607370000 MOZ 24VDC/24VDC 2A
-237X1	1	4.03.11.098.003	HOOD 16p M32 Side "T-Type"	ILME	TMAO 16.32
-237X1	1	4.03.11.098.007	HOUSING 16p "T-Type"	ILME	TCHI 16
-237X1	1	4.03.11.098.013	MALE CONECTOR 16p. CSH	ILME	CSHM 16
-237X1	1	4.03.11.098.017	FEMALE CONECTOR 16p. CSH	ILME	CSHF 16
-237Y0	1	4.02.03.068.001	VALVE COIL 24V DC (9w) +Chassis	LUCIFER	48.1865 24VDC + 48.2995
-237Y0	1	4.03.11.068.001	CONNECTOR (valves)	LUCIFER	Ref.48.6586
-237Y1	1	4.02.03.067.001	VALVE COIL 24Vdc (4,5w)	FESTO	MSFG-24 4527
-237Y2	1	4.02.03.067.001	VALVE COIL 24Vdc (4,5w)	FESTO	MSFG-24 4527
-237Y3	1	4.02.03.068.001	VALVE COIL 24V DC (9w) +Chassis	LUCIFER	48.1865 24VDC + 48.2995
-237Y3	1	4.03.11.068.001	CONNECTOR (valves)	LUCIFER	Ref.48.6586
-237Y4	1	4.02.03.068.001	VALVE COIL 24V DC (9w) +Chassis	LUCIFER	48.1865 24VDC + 48.2995
-237Y4	1	4.03.11.068.001	CONNECTOR (valves)	LUCIFER	Ref.48.6586
-237Y12	1	4.02.03.068.001	VALVE COIL 24V DC (9w) +Chassis	LUCIFER	48.1865 24VDC + 48.2995
-237Y12	1	4.03.11.068.001	CONNECTOR (valves)	LUCIFER	Ref.48.6586
-238K0	1	4.18.02.001.014	AUX.RELAY 24VDC (2 cont.)	OMRON	MY2 IN1-D2 24VD (S)
-238K0	1	4.02.01.001.005	SOCKET RELAY PYF 08S (CLAMP)	OMRON	PYF 08S BYOMZ
-238K1	1	4.18.02.001.014	AUX.RELAY 24VDC (2 cont.)	OMRON	MY2 IN1-D2 24VD (S)
-238K1	1	4.02.01.001.005	SOCKET RELAY PYF 08S (CLAMP)	OMRON	PYF 08S BYOMZ
-239K0	1	4.18.02.001.014	AUX.RELAY 24VDC (2 cont.)	OMRON	MY2 IN1-D2 24VD (S)
-239K0	1	4.02.01.001.005	SOCKET RELAY PYF 08S (CLAMP)	OMRON	PYF 08S BYOMZ

POSITION	QUANTITY	CODE	PART DESIGN	MANUFACTURER	MANUFACTURER REFERENCE
-239K1	1	4.18.02.001.014	AUX.RELAY 24VDC (2 cont.)	OMRON	MY2 IN1-D2 24VD (S)
-239K1	1	4.02.01.001.005	SOCKET RELAY PYF 08S (CLAMP)	OMRON	PYF 08S BYOMZ
-240A1	1	4.01.02.017.028	MODULE 32 Inputs PNP	ALLEN BRADLEY	1756-IB32
-240A1	1	4.01.02.017.059	TERM.BLOCK (36 pines) CLAMP	ALLEN BRADLEY	1756-TBS6H
-240X4	1	4.03.11.012.229	MALE CONNECTOR HAN-Q5	HARTING	09 12 005 2633
-240X4	1	4.03.11.012.230	FEMALE CONNECTOR HAN-Q5	HARTING	09 12 005 2733
-240X4	1	4.03.11.012.125	CONNECTOR COVER 7 poles M20 Side	HARTING	19 20 003 0620
-240X4	1	4.03.11.012.055	CONNECTOR SOCKET (PVC)	HARTING	09 20 003 0320
-241S6	1	4.04.03.001.010	IND.M12(PNP)(C/M12)4mm NO	OMRON	E2A-M12KS04-M1-B1
-241S6	1	4.03.11.119.107	CONNECTOR M12 4p.90‖ 5mts.	MURRELEKTRONIK	7014-12341-2140500
-241S7	1	4.04.03.286.037	LEVEL DETECTOR	VEGA	VEGASWING 61.XURDPXPTL (DN50PN25 DIN11864-1A) OF.4028623/1
-241X2	1	4.03.11.012.229	MALE CONNECTOR HAN-Q5	HARTING	09 12 005 2633
-241X2	1	4.03.11.012.230	FEMALE CONNECTOR HAN-Q5	HARTING	09 12 005 2733
-241X2	1	4.03.11.012.125	CONNECTOR COVER 7 poles M20 Side	HARTING	19 20 003 0620
-241X2	1	4.03.11.012.055	CONNECTOR SOCKET (PVC)	HARTING	09 20 003 0320
-241X7	1	4.03.11.012.227	MALE CONNECTOR HAN-A4 (Black)	HARTING	09 20 004 2633
-241X7	1	4.03.11.012.228	FEMALE CONNECTOR HAN-A4	HARTING	09 20 004 2733
-241X7	1	4.03.11.012.125	CONNECTOR COVER 7 poles M20 Side	HARTING	19 20 003 0620
-241X7	1	4.03.11.012.055	CONNECTOR SOCKET (PVC)	HARTING	09 20 003 0320
-242A1	1	4.01.02.017.029	MODULE 32 Outputs PNP	ALLEN BRADLEY	1756-OB32
-242A1	1	4.01.02.017.059	TERM.BLOCK (36 pines) CLAMP	ALLEN BRADLEY	1756-TBS6H
-242K1	1	4.18.02.001.011	AUX.RELAY 24VDC (4 cont.)	OMRON	MY4 IN1-D2 24VD (S)
-242K1	1	E.02.01.001.004	SOCKET RELAY PYF 14S	OMRON	PYF 14S
-242V12	1	4.18.02.043.002	STATIC RELAY 2A	WEIDMULLER	8607370000 MOZ 24VDC/24VDC 2A
-242V13	1	4.18.02.043.002	STATIC RELAY 2A	WEIDMULLER	8607370000 MOZ 24VDC/24VDC 2A
-242X1	1	4.03.11.098.004	HOOD 24p M40 Side "T-Type"	ILME	TMAO 24.40
-242X1	1	4.03.11.098.008	HOUSING 24p "T-Type"	ILME	TCHI 24
-242X1	1	4.03.11.098.014	MALE CONECTOR 24p. CSH	ILME	CSHM 24
-242X1	1	4.03.11.098.018	FEMALE CONECTOR 24p. CSH	ILME	CSHF 24
-242Y2	1	4.03.11.068.001	CONNECTOR (valves)	LUCIFER	Ref.48.6586

POSITION	QUANTITY	CODE	PART DESIGN	MANUFACTURER	MANUFACTURER REFERENCE
-242Y3	1	4.03.11.068.001	CONNECTOR (valves)	LUCIFER	Ref.48.6586
-243K7	1	4.18.02.001.011	AUX.RELAY 24VDC (4 cont.)	OMRON	MY4 IN1-D2 24VD (S)
-243K7	1	E.02.01.001.004	SOCKET RELAY PYF 14S	OMRON	PYF 14S
-243V13	1	4.18.02.043.002	STATIC RELAY 2A	WEIDMULLER	8607370000 MOZ 24VDC/24VDC 2A
-243V14	1	4.18.02.043.002	STATIC RELAY 2A	WEIDMULLER	8607370000 MOZ 24VDC/24VDC 2A
-300A1	1	4.03.11.119.158	CONNECTOR M12 Female 8p.s/c	MURRELEKTRONIK	7000-17331-0000000
-300A1	1	4.01.02.017.006	ControlLogix COUNTER MODUL	ALLEN BRADLEY	1756-HSC
-300A1	1	4.01.02.017.059	TERM.BLOCK (36 pines) CLAMP	ALLEN BRADLEY	1756-TBS6H
-300A2	1	4.03.11.119.158	CONNECTOR M12 Female 8p.s/c	MURRELEKTRONIK	7000-17331-0000000
-300R1	1	4.18.04.085.004	RESISTANCE 1K8 Ohm	RADIO SONDA	1k8 Ohm 1/2w
-300R2	1	4.18.04.085.004	RESISTANCE 1K8 Ohm	RADIO SONDA	1k8 Ohm 1/2w
-302A1	1	4.03.11.119.158	CONNECTOR M12 Female 8p.s/c	MURRELEKTRONIK	7000-17331-0000000
-302A1	1	4.01.02.017.006	ControlLogix COUNTER MODUL	ALLEN BRADLEY	1756-HSC
-302A1	1	4.01.02.017.059	TERM.BLOCK (36 pines) CLAMP	ALLEN BRADLEY	1756-TBS6H
-302A2	1	4.03.11.119.158	CONNECTOR M12 Female 8p.s/c	MURRELEKTRONIK	7000-17331-0000000
-302R1	1	4.18.04.085.004	RESISTANCE 1K8 Ohm	RADIO SONDA	1k8 Ohm 1/2w
-302R2	1	4.18.04.085.004	RESISTANCE 1K8 Ohm	RADIO SONDA	1k8 Ohm 1/2w
-310X1	1	4.03.11.098.004	HOOD 24p M40 Side "T-Type"	ILME	TMAO 24.40
-310X1	1	4.03.11.098.008	HOUSING 24p "T-Type"	ILME	TCHI 24
-310X1	1	4.03.11.098.014	MALE CONECTOR 24p. CSH	ILME	CSHM 24
-310X1	1	4.03.11.098.018	FEMALE CONECTOR 24p. CSH	ILME	CSHF 24
-314V12	1	4.18.02.043.002	STATIC RELAY 2A	WEIDMULLER	8607370000 MOZ 24VDC/24VDC 2A
-314V13	1	4.18.02.043.002	STATIC RELAY 2A	WEIDMULLER	8607370000 MOZ 24VDC/24VDC 2A
-314V15	1	4.18.02.043.002	STATIC RELAY 2A	WEIDMULLER	8607370000 MOZ 24VDC/24VDC 2A
-314V16	1	4.18.02.043.002	STATIC RELAY 2A	WEIDMULLER	8607370000 MOZ 24VDC/24VDC 2A
-315K0	1	4.03.06.005.036	STARTER CONTACTOR 24VDC (18A)TeS	SCHNEIDER	LC1-D183-BL
-315V11	1	4.18.02.043.002	STATIC RELAY 2A	WEIDMULLER	8607370000 MOZ 24VDC/24VDC 2A
-315V12	1	4.18.02.043.002	STATIC RELAY 2A	WEIDMULLER	8607370000 MOZ 24VDC/24VDC 2A
-315Y3	1	4.03.11.067.011	CONNECTOR WITH CABLE	FESTO	KMEB-1-24-5-LED Ref.:151 689
-320A1	6	4.03.11.119.150	CONNECTOR M8(M)3p	MURRELEKTRONIK	7000-08321-0000000

POSITION	QUANTITY	CODE	PART DESIGN	MANUFACTURER	MANUFACTURER REFERENCE
-320A1	2	4.20.03.119.003	MALE PLUG M8	MURRELEKTRONIK	3858627
-320B1	1	4.06.03.295.008	CONTRAST PHOTOCELL TL-46	DATASENSOR	TL46-WL-815 Ref.954601020 (Old TL46-W-815 Ref.954601000
-320B1	1	4.03.11.119.107	CONNECTOR M12 4p.90‖ 5mts.	MURRELEKTRONIK	7014-12341-2140500
-320B2	1	4.06.03.295.008	CONTRAST PHOTOCELL TL-46	DATASENSOR	TL46-WL-815 Ref.954601020 (Old TL46-W-815 Ref.954601000
-320B2	1	4.03.11.119.107	CONNECTOR M12 4p.90‖ 5mts.	MURRELEKTRONIK	7014-12341-2140500
-320S0	1	4.04.03.001.010	IND.M12(PNP)(C/M12)4mm NO	OMRON	E2A-M12KS04-M1-B1
-320S0	1	4.03.11.119.107	CONNECTOR M12 4p.90‖ 5mts.	MURRELEKTRONIK	7014-12341-2140500
-320S3	1	4.04.03.001.010	IND.M12(PNP)(C/M12)4mm NO	OMRON	E2A-M12KS04-M1-B1
-320S3	1	4.03.11.119.107	CONNECTOR M12 4p.90‖ 5mts.	MURRELEKTRONIK	7014-12341-2140500
-320S4	1	4.04.03.001.011	IND.M12(PNP)(C/M12)4mm NC	OMRON	E2A-M12KS04-M1-B2
-320S4	1	4.03.11.119.107	CONNECTOR M12 4p.90‖ 5mts.	MURRELEKTRONIK	7014-12341-2140500
-320S5	1	4.04.03.001.010	IND.M12(PNP)(C/M12)4mm NO	OMRON	E2A-M12KS04-M1-B1
-320S5	1	4.03.11.119.107	CONNECTOR M12 4p.90‖ 5mts.	MURRELEKTRONIK	7014-12341-2140500
-321A1	8	4.03.11.119.150	CONNECTOR M8(M)3p	MURRELEKTRONIK	7000-08321-0000000
-321B4	1	4.06.03.009.077	PHOTOCELL SUPR.(15mm)	SICK	WT2S-P211
-321B4	1	4.03.11.119.102	CONNECTOR M8 3p. 5mts.	MURRELEKTRONIK	7014-08041-2100500
-321B5	1	4.06.03.009.077	PHOTOCELL SUPR.(15mm)	SICK	WT2S-P211
-321B5	1	4.03.11.119.102	CONNECTOR M8 3p. 5mts.	MURRELEKTRONIK	7014-08041-2100500
-321S0	1	4.04.03.001.011	IND.M12(PNP)(C/M12)4mm NC	OMRON	E2A-M12KS04-M1-B2
-321S0	1	4.03.11.119.107	CONNECTOR M12 4p.90‖ 5mts.	MURRELEKTRONIK	7014-12341-2140500
-321S1	1	4.04.03.001.011	IND.M12(PNP)(C/M12)4mm NC	OMRON	E2A-M12KS04-M1-B2
-321S1	1	4.03.11.119.107	CONNECTOR M12 4p.90‖ 5mts.	MURRELEKTRONIK	7014-12341-2140500
-321S6	1	4.04.03.001.011	IND.M12(PNP)(C/M12)4mm NC	OMRON	E2A-M12KS04-M1-B2
-321S6	1	4.03.11.119.107	CONNECTOR M12 4p.90‖ 5mts.	MURRELEKTRONIK	7014-12341-2140500
-321S7	1	4.04.03.001.011	IND.M12(PNP)(C/M12)4mm NC	OMRON	E2A-M12KS04-M1-B2
-321S7	1	4.03.11.119.107	CONNECTOR M12 4p.90‖ 5mts.	MURRELEKTRONIK	7014-12341-2140500
-328A1	5	4.03.11.119.150	CONNECTOR M8(M)3p	MURRELEKTRONIK	7000-08321-0000000
-328A1	3	4.20.03.119.003	MALE PLUG M8	MURRELEKTRONIK	3858627
-328S0	1	4.04.03.001.010	IND.M12(PNP)(C/M12)4mm NO	OMRON	E2A-M12KS04-M1-B1
-328S0	1	4.03.11.119.107	CONNECTOR M12 4p.90‖ 5mts.	MURRELEKTRONIK	7014-12341-2140500

POSITION	QUANTITY	CODE	PART DESIGN	MANUFACTURER	MANUFACTURER REFERENCE
-328S1	1	4.04.03.001.010	IND.M12(PNP)(C/M12)4mm NO	OMRON	E2A-M12KS04-M1-B1
-328S1	1	4.03.11.119.107	CONNECTOR M12 4p.90‖ 5mts.	MURRELEKTRONIK	7014-12341-2140500
-328S2	1	4.04.03.001.010	IND.M12(PNP)(C/M12)4mm NO	OMRON	E2A-M12KS04-M1-B1
-328S2	1	4.03.11.119.107	CONNECTOR M12 4p.90‖ 5mts.	MURRELEKTRONIK	7014-12341-2140500
-328S3	1	4.04.03.001.010	IND.M12(PNP)(C/M12)4mm NO	OMRON	E2A-M12KS04-M1-B1
-328S3	1	4.03.11.119.107	CONNECTOR M12 4p.90‖ 5mts.	MURRELEKTRONIK	7014-12341-2140500
-328S4	1	4.04.03.009.003	CILINDER DETECTOR SWITCH (PNP) -	SICK	MZT6-03VPS-KP0 Ref.1 023 971
-328S4	1	4.03.11.119.122	CONNECTOR M8 3p. 10mts.	MURRELEKTRONIK	7014-08041-2101000
-329A1	8	4.20.03.119.003	MALE PLUG M8	MURRELEKTRONIK	3858627
-334A1	4	4.03.11.119.150	CONNECTOR M8(M)3p	MURRELEKTRONIK	7000-08321-0000000
-334A1	4	4.20.03.119.003	MALE PLUG M8	MURRELEKTRONIK	3858627
-334S4	1	4.04.03.001.010	IND.M12(PNP)(C/M12)4mm NO	OMRON	E2A-M12KS04-M1-B1
-334S4	1	4.03.11.119.111	CONNECTOR M12 4p.90‖ 10mts.	MURRELEKTRONIK	7014-12341-2141000
-334S5	1	4.04.03.001.010	IND.M12(PNP)(C/M12)4mm NO	OMRON	E2A-M12KS04-M1-B1
-334S5	1	4.03.11.119.111	CONNECTOR M12 4p.90‖ 10mts.	MURRELEKTRONIK	7014-12341-2141000
-334S6	1	4.04.03.001.010	IND.M12(PNP)(C/M12)4mm NO	OMRON	E2A-M12KS04-M1-B1
-334S6	1	4.03.11.119.111	CONNECTOR M12 4p.90‖ 10mts.	MURRELEKTRONIK	7014-12341-2141000
-334S7	1	4.04.03.001.010	IND.M12(PNP)(C/M12)4mm NO	OMRON	E2A-M12KS04-M1-B1
-334S7	1	4.03.11.119.111	CONNECTOR M12 4p.90‖ 10mts.	MURRELEKTRONIK	7014-12341-2141000
-335A1	2	4.03.11.119.150	CONNECTOR M8(M)3p	MURRELEKTRONIK	7000-08321-0000000
-335A1	6	4.20.03.119.003	MALE PLUG M8	MURRELEKTRONIK	3858627
-335S0	1	4.04.03.001.010	IND.M12(PNP)(C/M12)4mm NO	OMRON	E2A-M12KS04-M1-B1
-335S0	1	4.03.11.119.111	CONNECTOR M12 4p.90‖ 10mts.	MURRELEKTRONIK	7014-12341-2141000
-335S1	1	4.04.03.001.010	IND.M12(PNP)(C/M12)4mm NO	OMRON	E2A-M12KS04-M1-B1
-335S1	1	4.03.11.119.111	CONNECTOR M12 4p.90‖ 10mts.	MURRELEKTRONIK	7014-12341-2141000
-366A1	1	4.01.02.017.028	MODULE 32 Inputs PNP	ALLEN BRADLEY	1756-IB32
-366A1	1	4.01.02.017.059	TERM.BLOCK (36 pines) CLAMP	ALLEN BRADLEY	1756-TBS6H
-366B0	1	4.06.03.093.029	AMPLIFIER + M4 FIBER	KEYENCE	FS-V11PSO (2345) + FU-66
-367B0	1	4.06.03.093.037	AMPLIFIER + OPTICAL FIBER OF BAR	KEYENCE	FS-N11P+FU-7F
-367B0	1	4.03.11.119.104	CONNECTOR M8 4p.5mts.	MURRELEKTRONIK	7014-08061-2110500

POSITION	QUANTITY	CODE	PART DESIGN	MANUFACTURER	MANUFACTURER REFERENCE
-368A1	1	4.01.02.017.029	MODULE 32 Outputs PNP	ALLEN BRADLEY	1756-OB32
-368A1	1	4.01.02.017.059	TERM.BLOCK (36 pines) CLAMP	ALLEN BRADLEY	1756-TBS6H
-368K7	1	4.03.06.005.036	STARTER CONTACTOR 24VDC (18A)TeS	SCHNEIDER	LC1-D183-BL
-368Y4	1	4.03.11.067.102	CONNECTOR WITH LED (Ev. CPE) 5m	FESTO	KMYZ-9-24-5-LED-PUR-B Ref. 193689
-368Y5	1	4.03.11.067.102	CONNECTOR WITH LED (Ev. CPE) 5m	FESTO	KMYZ-9-24-5-LED-PUR-B Ref. 193689
-368Y6	1	4.03.11.067.102	CONNECTOR WITH LED (Ev. CPE) 5m	FESTO	KMYZ-9-24-5-LED-PUR-B Ref. 193689
-370B0	1	4.06.03.295.009	PHOTOCELL IN "U" 80mm	DATASENSOR	SRF80-5-P
-370B0	1	4.03.11.119.103	CONNECTOR M8 3p.90‖ 5mts.	MURRELEKTRONIK	7014-08081-2100500
-370B1	1	4.06.03.295.009	PHOTOCELL IN "U" 80mm	DATASENSOR	SRF80-5-P
-370B1	1	4.03.11.119.103	CONNECTOR M8 3p.90‖ 5mts.	MURRELEKTRONIK	7014-08081-2100500
-370B2	1	4.06.03.295.009	PHOTOCELL IN "U" 80mm	DATASENSOR	SRF80-5-P
-370B2	1	4.03.11.119.103	CONNECTOR M8 3p.90‖ 5mts.	MURRELEKTRONIK	7014-08081-2100500
-370B3	1	4.06.03.295.009	PHOTOCELL IN "U" 80mm	DATASENSOR	SRF80-5-P
-370B3	1	4.03.11.119.103	CONNECTOR M8 3p.90‖ 5mts.	MURRELEKTRONIK	7014-08081-2100500
-370S4	1	4.04.03.009.003	CILINDER DETECTOR SWITCH (PNP) -	SICK	MZT6-03VPS-KP0 Ref.1 023 971
-370S4	1	4.03.11.119.102	CONNECTOR M8 3p. 5mts.	MURRELEKTRONIK	7014-08041-2100500
-370S5	1	4.04.03.009.003	CILINDER DETECTOR SWITCH (PNP) -	SICK	MZT6-03VPS-KP0 Ref.1 023 971
-370S5	1	4.03.11.119.102	CONNECTOR M8 3p. 5mts.	MURRELEKTRONIK	7014-08041-2100500
-370S6	1	4.04.03.009.003	CILINDER DETECTOR SWITCH (PNP) -	SICK	MZT6-03VPS-KP0 Ref.1 023 971
-370S6	1	4.03.11.119.102	CONNECTOR M8 3p. 5mts.	MURRELEKTRONIK	7014-08041-2100500
-370S7	1	4.04.03.009.003	CILINDER DETECTOR SWITCH (PNP) -	SICK	MZT6-03VPS-KP0 Ref.1 023 971
-370S7	1	4.03.11.119.102	CONNECTOR M8 3p. 5mts.	MURRELEKTRONIK	7014-08041-2100500
-370X1	1	4.03.11.098.004	HOOD 24p M40 Side "T-Type"	ILME	TMAO 24.40
-370X1	1	4.03.11.098.008	HOUSING 24p "T-Type"	ILME	TCHI 24
-370X1	1	4.03.11.098.014	MALE CONECTOR 24p. CSH	ILME	CSHM 24
-370X1	1	4.03.11.098.018	FEMALE CONECTOR 24p. CSH	ILME	CSHF 24
-371S4	1	4.04.03.009.003	CILINDER DETECTOR SWITCH (PNP) -	SICK	MZT6-03VPS-KP0 Ref.1 023 971
-371S4	1	4.03.11.119.102	CONNECTOR M8 3p. 5mts.	MURRELEKTRONIK	7014-08041-2100500
-372V10	1	4.18.02.043.002	STATIC RELAY 2A	WEIDMULLER	8607370000 MOZ 24VDC/24VDC 2A
-372V11	1	4.18.02.043.002	STATIC RELAY 2A	WEIDMULLER	8607370000 MOZ 24VDC/24VDC 2A

POSITION	QUANTITY	CODE	PART DESIGN	MANUFACTURER	MANUFACTURER REFERENCE
-372Y0	1	4.03.11.067.102	CONNECTOR WITH LED (Ev. CPE) 5m	FESTO	KMYZ-9-24-5-LED-PUR-B Ref. 193689
-372Y1	1	4.03.11.067.102	CONNECTOR WITH LED (Ev. CPE) 5m	FESTO	KMYZ-9-24-5-LED-PUR-B Ref. 193689
-372Y10	1	4.03.11.067.102	CONNECTOR WITH LED (Ev. CPE) 5m	FESTO	KMYZ-9-24-5-LED-PUR-B Ref. 193689
-372Y20	1	4.03.11.067.102	CONNECTOR WITH LED (Ev. CPE) 5m	FESTO	KMYZ-9-24-5-LED-PUR-B Ref. 193689
-372Y30	1	4.03.11.067.102	CONNECTOR WITH LED (Ev. CPE) 5m	FESTO	KMYZ-9-24-5-LED-PUR-B Ref. 193689
-400X1	1	4.03.11.098.001	HOOD 6p M25 Side "T-Type"	ILME	TMAO 06 L25
-400X1	1	4.03.11.098.005	HOUSING 6p "T-Type"	ILME	TCHI 06 L
-400X1	1	4.03.11.098.011	MALE CONECTOR 6p. CSH	ILME	CSHM 06
-400X1	1	4.03.11.098.015	FEMALE CONECTOR 6p. CSH	ILME	CSHF 06
-400X2	1	4.03.11.098.042	HOOD 24p M32 Side "T-Type"	ILME	TMAO 24.32
-400X2	1	4.03.11.098.008	HOUSING 24p "T-Type"	ILME	TCHI 24
-400X2	1	E.03.11.098.050	CONNECTOR MALE 46 (pins)	ILME	CQEM 46
-400X2	1	E.03.11.098.049	CONNECTOR FEMALE 46 (pins)	ILME	CQEF 46
-410B1	1	4.06.03.295.009	PHOTOCELL IN "U" 80mm	DATASENSOR	SRF80-5-P
-410B1	1	4.03.11.119.103	CONNECTOR M8 3p.90‖ 5mts.	MURRELEKTRONIK	7014-08081-2100500
-411B1	1	4.06.03.295.009	PHOTOCELL IN "U" 80mm	DATASENSOR	SRF80-5-P
-411B1	1	4.03.11.119.103	CONNECTOR M8 3p.90‖ 5mts.	MURRELEKTRONIK	7014-08081-2100500
-415A1	1	4.01.02.001.168	REMOTE OUTPUT SMARTSLICE	OMRON	GRT1-OD8-1 (PNP)
-415K10	1	4.18.02.043.003	RELAY 24VDC (1CO_6A/250V)	WEIDMULLER	8553660000 MRZ 24VDC 1CO
-415K11	1	4.18.02.043.003	RELAY 24VDC (1CO_6A/250V)	WEIDMULLER	8553660000 MRZ 24VDC 1CO
-415K13	1	4.18.02.043.003	RELAY 24VDC (1CO_6A/250V)	WEIDMULLER	8553660000 MRZ 24VDC 1CO
-415K14	1	4.18.02.043.003	RELAY 24VDC (1CO_6A/250V)	WEIDMULLER	8553660000 MRZ 24VDC 1CO
-415K16	1	4.18.02.043.003	RELAY 24VDC (1CO_6A/250V)	WEIDMULLER	8553660000 MRZ 24VDC 1CO
-415K17	1	4.18.02.043.003	RELAY 24VDC (1CO_6A/250V)	WEIDMULLER	8553660000 MRZ 24VDC 1CO
-425A1	8	4.03.11.119.150	CONNECTOR M8(M)3p	MURRELEKTRONIK	7000-08321-0000000
-426A1	8	4.03.11.119.150	CONNECTOR M8(M)3p	MURRELEKTRONIK	7000-08321-0000000
-427A1	8	4.03.11.119.150	CONNECTOR M8(M)3p	MURRELEKTRONIK	7000-08321-0000000
-428A1	3	4.03.11.119.150	CONNECTOR M8(M)3p	MURRELEKTRONIK	7000-08321-0000000
-428A1	5	4.20.03.119.003	MALE PLUG M8	MURRELEKTRONIK	3858627
-428S0	1	4.04.03.001.010	IND.M12(PNP)(C/M12)4mm NO	OMRON	E2A-M12KS04-M1-B1

POSITION	QUANTITY	CODE	PART DESIGN	MANUFACTURER	MANUFACTURER REFERENCE
-428S0	1	4.03.11.119.107	CONNECTOR M12 4p.90‖ 5mts.	MURRELEKTRONIK	7014-12341-2140500
-428S6	1	4.03.11.119.102	CONNECTOR M8 3p. 5mts.	MURRELEKTRONIK	7014-08041-2100500
-428S7	1	4.03.11.119.102	CONNECTOR M8 3p. 5mts.	MURRELEKTRONIK	7014-08041-2100500
-500F0	1	4.09.05.007.054	CIRCUIT BREAKER III 10A UL	SCHNEIDER	MG 24466
-500G1	1	4.06.04.005.001	POWER SUPPLY 24VDC 10A	SCHNEIDER	ABL8 RPS24100
-500H1	1	4.16.01.005.011	WHITE PILOT CONTACT	SCHNEIDER	ZB4 BV013
-500H1	1	4.03.02.005.027	WHITE LED	SCHNEIDER	ZB4 BVB1
-500H1	1	4.05.04.005.002	LABEL SUPPORT 30x50mm	SCHNEIDER	ZBZ-33
-500Q1	1	4.09.02.017.043	INTER.SECC.25A (PANEL) 3 POLE	ALLEN BRADLEY	194E-E25-1753
-500Q2	1	4.09.04.005.049	MANUAL MOTOR PROTEC. (2,5-4A)	SCHNEIDER	GV2-ME083
-500Q2	1	4.09.04.005.056	CONTACT MANUAL MOTOR PROTECTOR	SCHNEIDER	GV-AN113 (GV2 AN11)
-500X0	1	4.03.11.098.001	HOOD 6p M25 Side "T-Type"	ILME	TMAO 06 L25
-500X0	1	4.03.11.098.005	HOUSING 6p "T-Type"	ILME	TCHI 06 L
-500X0	1	4.03.11.098.011	MALE CONECTOR 6p. CSH	ILME	CSHM 06
-500X0	1	4.03.11.098.015	FEMALE CONECTOR 6p. CSH	ILME	CSHF 06
-500X1	1	4.03.11.098.001	HOOD 6p M25 Side "T-Type"	ILME	TMAO 06 L25
-500X1	1	4.03.11.098.005	HOUSING 6p "T-Type"	ILME	TCHI 06 L
-500X1	1	4.03.11.098.011	MALE CONECTOR 6p. CSH	ILME	CSHM 06
-500X1	1	4.03.11.098.015	FEMALE CONECTOR 6p. CSH	ILME	CSHF 06
-503B1	1	4.06.03.295.008	CONTRAST PHOTOCELL TL-46	DATASENSOR	TL46-WL-815 Ref.954601020 (Old TL46-W-815 Ref.954601000
-503B1	1	4.03.11.012.147	CONNECTOR M12(F) "HARAX" 90¦	HARTING	21 01 140 5091
-503K10	1	4.18.02.043.003	RELAY 24VDC (1CO_6A/250V)	WEIDMULLER	8553660000 MRZ 24VDC 1CO
-503N1	1	4.03.08.263.009	CLUTCH-BRAKE CONTROL SP-150	BASMEL	9115-D
-504Q1	1	4.09.04.005.052	MANUAL MOTOR PROTEC. (6-10A)	SCHNEIDER	GV2-ME143
-504Q1	1	4.09.04.005.056	CONTACT MANUAL MOTOR PROTECTOR	SCHNEIDER	GV-AN113 (GV2 AN11)
-510X0	1	4.03.11.012.107	MALE CONNECTOR 46 PINS HanEE	HARTING	09 32 046 3001
-510X0	1	4.03.11.012.108	FEMALE CONNECTOR 46 PINS HanEE	HARTING	09 32 046 3101
-510X0	1	4.03.11.098.008	HOUSING 24p "T-Type"	ILME	TCHI 24
-510X0	1	4.03.11.098.004	HOOD 24p M40 Side "T-Type"	ILME	TMAO 24.40
-510X1	1	4.03.11.012.107	MALE CONNECTOR 46 PINS HanEE	HARTING	09 32 046 3001

POSITION	QUANTITY	CODE	PART DESIGN	MANUFACTURER	MANUFACTURER REFERENCE
-510X1	1	4.03.11.012.108	FEMALE CONNECTOR 46 PINS HanEE	HARTING	09 32 046 3101
-510X1	1	4.03.11.098.008	HOUSING 24p "T-Type"	ILME	TCHI 24
-510X1	1	4.03.11.098.004	HOOD 24p M40 Side "T-Type"	ILME	TMAO 24.40
-511K1	1	4.18.02.005.006	EMERGENCY RELAY (2NC) Cat.3	SCHNEIDER	XPS-DMB1132P
-511K2	1	4.18.02.001.015	RELAY SAFETY EMERGENCY	OMRON	G7SA-5A1B
-511K2	1	4.02.01.001.006	BASE RELAY SAFETY c/LED	OMRON	P7SA-14F-ND
-511K3	1	4.18.02.001.015	RELAY SAFETY EMERGENCY	OMRON	G7SA-5A1B
-511K3	1	4.02.01.001.006	BASE RELAY SAFETY c/LED	OMRON	P7SA-14F-ND
-511K11	1	4.18.02.005.006	EMERGENCY RELAY (2NC) Cat.3	SCHNEIDER	XPS-DMB1132P
-511K12	1	4.18.02.001.015	RELAY SAFETY EMERGENCY	OMRON	G7SA-5A1B
-511K12	1	4.02.01.001.006	BASE RELAY SAFETY c/LED	OMRON	P7SA-14F-ND
-511K13	1	4.18.02.001.015	RELAY SAFETY EMERGENCY	OMRON	G7SA-5A1B
-511K13	1	4.02.01.001.006	BASE RELAY SAFETY c/LED	OMRON	P7SA-14F-ND
-511S10	1	4.09.06.005.003	MAGNETIC SWITCH SAFETY (2NC+1NO	SCHNEIDER	XCS-DMP5005
-511S11	1	4.09.06.005.003	MAGNETIC SWITCH SAFETY (2NC+1NO	SCHNEIDER	XCS-DMP5005
-511S12	1	4.09.06.005.003	MAGNETIC SWITCH SAFETY (2NC+1NO	SCHNEIDER	XCS-DMP5005
-511S20	1	4.09.06.005.003	MAGNETIC SWITCH SAFETY (2NC+1NO	SCHNEIDER	XCS-DMP5005
-511S21	1	4.09.06.005.003	MAGNETIC SWITCH SAFETY (2NC+1NO	SCHNEIDER	XCS-DMP5005
-511S22	1	4.09.06.005.003	MAGNETIC SWITCH SAFETY (2NC+1NO	SCHNEIDER	XCS-DMP5005
-511X1	1	4.03.11.098.004	HOOD 24p M40 Side "T-Type"	ILME	TMAO 24.40
-511X1	1	4.03.11.098.008	HOUSING 24p "T-Type"	ILME	TCHI 24
-511X1	1	4.03.11.098.014	MALE CONECTOR 24p. CSH	ILME	CSHM 24
-511X1	1	4.03.11.098.018	FEMALE CONECTOR 24p. CSH	ILME	CSHF 24
-511Y10	1	4.03.11.119.107	CONNECTOR M12 4p.90‖ 5mts.	MURRELEKTRONIK	7014-12341-2140500
-511Y20	1	4.03.11.119.107	CONNECTOR M12 4p.90‖ 5mts.	MURRELEKTRONIK	7014-12341-2140500
-511Y30	1	4.03.11.119.107	CONNECTOR M12 4p.90‖ 5mts.	MURRELEKTRONIK	7014-12341-2140500
-520A1	1	4.01.02.001.199	CPU PLC CP1E (36 inp / 24 out)	OMRON	CP1E-N60DT1-D
-520A1	1	4.01.02.001.204	BATTERY CP1E CPU	OMRON	CP1W-BAT01
-520A2	1	4.01.02.001.200	EXPANSION UNIT 32 Output CP1W-32	OMRON	CP1W-32ET1
-520D1	1	4.16.02.092.041	TOUCH SCREEN 5,7" TFT, QVGA	LOGITEK	GP-4301TW Ref.PFXGP4301TADW

POSITION	QUANTITY	CODE	PART DESIGN	MANUFACTURER	MANUFACTURER REFERENCE
-520EV1	1	4.22.03.011.033	CABINET FAN (116mm) 24V	RITTAL	SK 3237.124(SK 3321.027)
-520EV1	1	4.22.03.011.021	FUN FILTER (116mm)	RITTAL	SK 3237.200 (SK 3321.207)
-520EV1	1	4.22.03.011.023	WATERPROOF COVER	RITTAL	SK 3237.080(SK 3321.800)
-520EV1	1	4.22.03.011.023	WATERPROOF COVER	RITTAL	SK 3237.080(SK 3321.800)
-520X1	1	4.03.11.158.013	FEMALE CONNECTOR SUB-D 9 (9 pine	BONAS Electroni	SUB-D 9H
-520X1	1	4.03.11.158.023	CONNECTOR COVER SUB-D 9	no definido	SUB-D 9 CUB
-520X1	1	4.03.11.158.003	CONNECTOR MALE SUB-D 9 pins	no definido	SUB-D 9M
-520X1	1	4.03.11.158.023	CONNECTOR COVER SUB-D 9	no definido	SUB-D 9 CUB
-520X1	1	4.03.11.292.018	SLEEVE CABLE RAISIN (6-7 mm)	MURRPLASTIK	KDL 2/10 Ref.87171017
-520X1	5	4.03.11.292.002	SLEEVE CABLE RAISIN (9-10 mm)	MURRPLASTIK	KDT/Z 09 Ref.87171224
-520X1	5	4.03.11.292.003	PLUG PLATE CABLE RAISIN	MURRPLASTIK	BTK 17 Ref.87171210
-531S1	1	4.04.03.001.013	IND.M8(PNP)(C/M8)3mm NO	OMRON	E2A3-S08KS03-M5-B1
-531S1	1	4.03.11.119.103	CONNECTOR M8 3p.90‖ 5mts.	MURRELEKTRONIK	7014-08081-2100500
-531S2	1	4.04.03.001.013	IND.M8(PNP)(C/M8)3mm NO	OMRON	E2A3-S08KS03-M5-B1
-531S2	1	4.03.11.119.103	CONNECTOR M8 3p.90‖ 5mts.	MURRELEKTRONIK	7014-08081-2100500
-533S0	1	4.04.03.001.013	IND.M8(PNP)(C/M8)3mm NO	OMRON	E2A3-S08KS03-M5-B1
-533S0	1	4.03.11.119.103	CONNECTOR M8 3p.90‖ 5mts.	MURRELEKTRONIK	7014-08081-2100500
-533S1	1	4.04.03.001.013	IND.M8(PNP)(C/M8)3mm NO	OMRON	E2A3-S08KS03-M5-B1
-533S1	1	4.03.11.119.103	CONNECTOR M8 3p.90‖ 5mts.	MURRELEKTRONIK	7014-08081-2100500
-533S2	1	4.04.03.001.013	IND.M8(PNP)(C/M8)3mm NO	OMRON	E2A3-S08KS03-M5-B1
-533S2	1	4.03.11.119.103	CONNECTOR M8 3p.90‖ 5mts.	MURRELEKTRONIK	7014-08081-2100500
-533S3	1	4.04.03.001.013	IND.M8(PNP)(C/M8)3mm NO	OMRON	E2A3-S08KS03-M5-B1
-533S3	1	4.03.11.119.103	CONNECTOR M8 3p.90‖ 5mts.	MURRELEKTRONIK	7014-08081-2100500
-534S0	1	4.04.03.001.011	IND.M12(PNP)(C/M12)4mm NC	OMRON	E2A-M12KS04-M1-B2
-534S0	1	4.03.11.119.107	CONNECTOR M12 4p.90‖ 5mts.	MURRELEKTRONIK	7014-12341-2140500
-534S1	1	4.04.03.001.011	IND.M12(PNP)(C/M12)4mm NC	OMRON	E2A-M12KS04-M1-B2
-534S1	1	4.03.11.119.107	CONNECTOR M12 4p.90‖ 5mts.	MURRELEKTRONIK	7014-12341-2140500
-534S2	1	4.04.03.009.003	CILINDER DETECTOR SWITCH (PNP) -	SICK	MZT6-03VPS-KP0 Ref.1 023 971
-534S2	1	4.03.11.119.102	CONNECTOR M8 3p. 5mts.	MURRELEKTRONIK	7014-08041-2100500
-534S3	1	4.04.03.009.003	CILINDER DETECTOR SWITCH (PNP) -	SICK	MZT6-03VPS-KP0 Ref.1 023 971

POSITION	QUANTITY	CODE	PART DESIGN	MANUFACTURER	MANUFACTURER REFERENCE
-534S3	1	4.03.11.119.102	CONNECTOR M8 3p. 5mts.	MURRELEKTRONIK	7014-08041-2100500
-534S4	1	4.04.03.009.003	CILINDER DETECTOR SWITCH (PNP) -	SICK	MZT6-03VPS-KP0 Ref.1 023 971
-534S4	1	4.03.11.119.102	CONNECTOR M8 3p. 5mts.	MURRELEKTRONIK	7014-08041-2100500
-534S5	1	4.04.03.009.003	CILINDER DETECTOR SWITCH (PNP) -	SICK	MZT6-03VPS-KP0 Ref.1 023 971
-534S5	1	4.03.11.119.102	CONNECTOR M8 3p. 5mts.	MURRELEKTRONIK	7014-08041-2100500
-534S6	1	4.04.03.009.003	CILINDER DETECTOR SWITCH (PNP) -	SICK	MZT6-03VPS-KP0 Ref.1 023 971
-534S6	1	4.03.11.119.102	CONNECTOR M8 3p. 5mts.	MURRELEKTRONIK	7014-08041-2100500
-534S7	1	4.04.03.009.003	CILINDER DETECTOR SWITCH (PNP) -	SICK	MZT6-03VPS-KP0 Ref.1 023 971
-534S7	1	4.03.11.119.102	CONNECTOR M8 3p. 5mts.	MURRELEKTRONIK	7014-08041-2100500
-535S0	1	4.04.03.009.003	CILINDER DETECTOR SWITCH (PNP) -	SICK	MZT6-03VPS-KP0 Ref.1 023 971
-535S0	1	4.03.11.119.102	CONNECTOR M8 3p. 5mts.	MURRELEKTRONIK	7014-08041-2100500
-535S1	1	4.04.03.009.003	CILINDER DETECTOR SWITCH (PNP) -	SICK	MZT6-03VPS-KP0 Ref.1 023 971
-535S1	1	4.03.11.119.102	CONNECTOR M8 3p. 5mts.	MURRELEKTRONIK	7014-08041-2100500
-535S2	1	4.04.03.009.003	CILINDER DETECTOR SWITCH (PNP) -	SICK	MZT6-03VPS-KP0 Ref.1 023 971
-535S2	1	4.03.11.119.102	CONNECTOR M8 3p. 5mts.	MURRELEKTRONIK	7014-08041-2100500
-536H2	1	4.03.14.252.001	LIGHT PANEL	BANNER	K50LGRYPQ
-536H2	1	4.03.14.252.002	LIGHT PANEL SUPPORT	BANNER	SMB30A
-536H2	1	4.03.11.119.106	CONNECTOR M12 4p.5mts.	MURRELEKTRONIK	7014-12221-2140500
-536H5	1	4.03.14.252.001	LIGHT PANEL	BANNER	K50LGRYPQ
-536H5	1	4.03.14.252.002	LIGHT PANEL SUPPORT	BANNER	SMB30A
-536H5	1	4.03.11.119.106	CONNECTOR M12 4p.5mts.	MURRELEKTRONIK	7014-12221-2140500
-536H7	1	4.01.06.126.004	BUZZER 12/24VDC IP-65	WERMA	FERNANDO CARRASCO: Ref.140.150.50 rojo
-536K0	1	4.03.06.005.037	STARTER CONTACTOR 24VDC (12A)TeS	SCHNEIDER	LC1-D123-BL
-537K7	1	4.18.02.001.011	AUX.RELAY 24VDC (4 cont.)	OMRON	MY4 IN1-D2 24VD (S)
-537K7	1	E.02.01.001.004	SOCKET RELAY PYF 14S	OMRON	PYF 14S
-538K16	1	4.18.02.043.003	RELAY 24VDC (1CO_6A/250V)	WEIDMULLER	8553660000 MRZ 24VDC 1CO
-538K17	1	4.18.02.043.003	RELAY 24VDC (1CO_6A/250V)	WEIDMULLER	8553660000 MRZ 24VDC 1CO
-601E1	1	4.01.09.051.035	PVC POCKET DIN A4	SCHNEIDER	PP-A4
-603X1	1	4.03.11.292.020	ACCESSORY FOR WIRED	MURRPLASTIK	KDL/E 24/10 Ref.87121020
-603X1	4	4.03.11.292.024	ACCESSORY FOR WIRED (9-10 mm.)	MURRPLASTIK	KDT/ZE 09 Ref.87121222

POSITION	QUANTITY	CODE	PART DESIGN	MANUFACTURER	MANUFACTURER REFERENCE
-603X1	4	4.03.11.292.022	ACCESSORY FOR WIRED (5-6mm)	MURRPLASTIK	KDT/ZE 05 Ref:87121214
-603X1	2	4.03.11.292.021	ACCESSORY FOR WIRED (1h)	MURRPLASTIK	BTK/E Ref.87121266
-603X2	1	4.03.11.292.020	ACCESSORY FOR WIRED	MURRPLASTIK	KDL/E 24/10 Ref.87121020
-603X2	1	4.03.11.292.025	ACCESSORY FOR WIRED (11-12 mm.)	MURRPLASTIK	KDT/ZE 11 Ref.87121226
-603X2	1	4.03.11.292.024	ACCESSORY FOR WIRED (9-10 mm.)	MURRPLASTIK	KDT/ZE 09 Ref.87121222
-603X2	8	4.03.11.292.021	ACCESSORY FOR WIRED (1h)	MURRPLASTIK	BTK/E Ref.87121266
-607E10	1	4.02.04.011.001	GROUND TERMINAL BAR	RITTAL	DK 7113
-608W1	9	4.03.03.241.038	TRAY GRILLE CF54/100 INOX	CABLOFIL	CF 54/100 Inox 304L. Ref.000 078
-608W2	6	4.03.03.241.041	TRAY GRILLE CF54/50 INOX	CABLOFIL	CF 54/50 Inox. Ref. 000 068
-608W3	9	4.03.03.241.042	TRAY GRILLE TXF35 INOX	CABLOFIL	TXF35 Cod.755 008 (Inox.)
-608W4	15	4.03.03.241.045	TRAY GRILLE CF105/200 INOX	CABLOFIL	CF 105/200 Inox 304L. Cod.000 918
-608W5	6	4.03.03.241.059	TRAY GRILLE CF54/200 INOX	CABLOFIL	CF 54/200 Inox 304L. Cod.000 098
-608W6	6	4.03.03.241.047	TRAY GRILLE CF105/400 INOX	CABLOFIL	CF 105/400 Inox 304L. Cod.000 938
-608W10	25	4.03.03.241.031	ACCESSORY UNION TRAY FAST	CABLOFIL	EDRN Cod. 011 451
-608X120	3	4.03.11.292.011	PROFILE HOLDS CABLES (9 cables)	MURRPLASTIK	ZL-MH 140 Ref.87701220
-651X1	1	4.03.11.292.026	CABLE ACCESSORY (23x4-8mm)	MURRPLASTIK	KDP 24/23 Ref:87301170 (Old Ref.87301018)
-700E1	1	3000300107000004	ELECTRICAL LIST	VOLPAK	TUBO DN-12 (A/Tª) Inox-316 HPR
-700E1	1	3000300216000004	ELECTRICAL LIST	VOLPAK	SOLDADOR SONDA Pt-100 4m 3h
-700E2	1	3000300107000004	ELECTRICAL LIST	VOLPAK	TUBO DN-12 (A/Tª) Inox-316 HPR
-700E2	1	3000300216000004	ELECTRICAL LIST	VOLPAK	SOLDADOR SONDA Pt-100 4m 3h
-700E3	1	3000300107000004	ELECTRICAL LIST	VOLPAK	TUBO DN-12 (A/Tª) Inox-316 HPR
-700E3	1	3000300216000004	ELECTRICAL LIST	VOLPAK	SOLDADOR SONDA Pt-100 4m 3h
-700E4	1	3000300107000004	ELECTRICAL LIST	VOLPAK	TUBO DN-12 (A/Tª) Inox-316 HPR
-700E4	1	3000300216000004	ELECTRICAL LIST	VOLPAK	SOLDADOR SONDA Pt-100 4m 3h
-700E11	1	3000300107000004	ELECTRICAL LIST	VOLPAK	TUBO DN-12 (A/Tª) Inox-316 HPR
-700E12	1	3000300107000004	ELECTRICAL LIST	VOLPAK	TUBO DN-12 (A/Tª) Inox-316 HPR
-701E1	1	3000300107000004	ELECTRICAL LIST	VOLPAK	TUBO DN-12 (A/Tª) Inox-316 HPR
-701E1	1	3000300216000004	ELECTRICAL LIST	VOLPAK	SOLDADOR SONDA Pt-100 4m 3h
-701E2	1	3000300107000004	ELECTRICAL LIST	VOLPAK	TUBO DN-12 (A/Tª) Inox-316 HPR
-701E2	1	3000300216000004	ELECTRICAL LIST	VOLPAK	SOLDADOR SONDA Pt-100 4m 3h

POSITION	QUANTITY	CODE	PART DESIGN	MANUFACTURER	MANUFACTURER REFERENCE
-701E3	1	3000300107000004	ELECTRICAL LIST	VOLPAK	TUBO DN-12 (A/Tª) Inox-316 HPR
-701E3	1	3000300216000004	ELECTRICAL LIST	VOLPAK	SOLDADOR SONDA Pt-100 4m 3h
-701E4	1	3000300107000004	ELECTRICAL LIST	VOLPAK	TUBO DN-12 (A/Tª) Inox-316 HPR
-701E4	1	3000300216000004	ELECTRICAL LIST	VOLPAK	SOLDADOR SONDA Pt-100 4m 3h
-701E5	1	3000300107000004	ELECTRICAL LIST	VOLPAK	TUBO DN-12 (A/Tª) Inox-316 HPR
-701E6	1	3000300107000004	ELECTRICAL LIST	VOLPAK	TUBO DN-12 (A/Tª) Inox-316 HPR
-702E1	1	3000300107000004	ELECTRICAL LIST	VOLPAK	TUBO DN-12 (A/Tª) Inox-316 HPR
-702E1	1	3000300216000004	ELECTRICAL LIST	VOLPAK	SOLDADOR SONDA Pt-100 4m 3h
-702E2	1	3000300107000004	ELECTRICAL LIST	VOLPAK	TUBO DN-12 (A/Tª) Inox-316 HPR
-702E2	1	3000300216000004	ELECTRICAL LIST	VOLPAK	SOLDADOR SONDA Pt-100 4m 3h
-702E3	1	3000300107000004	ELECTRICAL LIST	VOLPAK	TUBO DN-12 (A/Tª) Inox-316 HPR
-702E3	1	3000300216000004	ELECTRICAL LIST	VOLPAK	SOLDADOR SONDA Pt-100 4m 3h
-702E4	1	3000300107000004	ELECTRICAL LIST	VOLPAK	TUBO DN-12 (A/Tª) Inox-316 HPR
-702E4	1	3000300216000004	ELECTRICAL LIST	VOLPAK	SOLDADOR SONDA Pt-100 4m 3h
-703E1	1	3000300107000004	ELECTRICAL LIST	VOLPAK	TUBO DN-12 (A/Tª) Inox-316 HPR
-703E1	1	3000300216000004	ELECTRICAL LIST	VOLPAK	SOLDADOR SONDA Pt-100 4m 3h
-703E2	1	3000300107000004	ELECTRICAL LIST	VOLPAK	TUBO DN-12 (A/Tª) Inox-316 HPR
-703E2	1	3000300216000004	ELECTRICAL LIST	VOLPAK	SOLDADOR SONDA Pt-100 4m 3h
-703E3	1	3000300107000004	ELECTRICAL LIST	VOLPAK	TUBO DN-12 (A/Tª) Inox-316 HPR
-703E4	1	3000300107000004	ELECTRICAL LIST	VOLPAK	TUBO DN-12 (A/Tª) Inox-316 HPR
-706E1	1	3000300107000004	ELECTRICAL LIST	VOLPAK	TUBO DN-12 (A/Tª) Inox-316 HPR
-706E1	1	3000300206000004	ELECTRICAL LIST	VOLPAK	SOLDADOR SONDA (TIPO J 4m)
-706E2	1	3000300107000004	ELECTRICAL LIST	VOLPAK	TUBO DN-12 (A/Tª) Inox-316 HPR
-706E2	1	3000300206000004	ELECTRICAL LIST	VOLPAK	SOLDADOR SONDA (TIPO J 4m)
-706E3	1	3000300107000004	ELECTRICAL LIST	VOLPAK	TUBO DN-12 (A/Tª) Inox-316 HPR
-706E3	1	3000300206000004	ELECTRICAL LIST	VOLPAK	SOLDADOR SONDA (TIPO J 4m)
-706E4	1	3000300107000004	ELECTRICAL LIST	VOLPAK	TUBO DN-12 (A/Tª) Inox-316 HPR
-706E4	1	3000300206000004	ELECTRICAL LIST	VOLPAK	SOLDADOR SONDA (TIPO J 4m)
-707E1	1	3000300107000004	ELECTRICAL LIST	VOLPAK	TUBO DN-12 (A/Tª) Inox-316 HPR
-707E1	1	3000300206000004	ELECTRICAL LIST	VOLPAK	SOLDADOR SONDA (TIPO J 4m)

POSITION	QUANTITY	CODE	PART DESIGN	MANUFACTURER	MANUFACTURER REFERENCE
-707E2	1	3000300107000004	ELECTRICAL LIST	VOLPAK	TUBO DN-12 (A/Tª) Inox-316 HPR
-707E2	1	3000300206000004	ELECTRICAL LIST	VOLPAK	SOLDADOR SONDA (TIPO J 4m)
-707E3	1	3000300107000004	ELECTRICAL LIST	VOLPAK	TUBO DN-12 (A/Tª) Inox-316 HPR
-707E3	1	3000300206000004	ELECTRICAL LIST	VOLPAK	SOLDADOR SONDA (TIPO J 4m)
-707E4	1	3000300107000004	ELECTRICAL LIST	VOLPAK	TUBO DN-12 (A/Tª) Inox-316 HPR
-707E4	1	3000300206000004	ELECTRICAL LIST	VOLPAK	SOLDADOR SONDA (TIPO J 4m)
-800A1	3	4.01.09.011.120	ELECTRICAL CABINET INOX1200x2000	RITTAL	TS 8451.600
-800A1	3	4.01.09.011.042	SOCKET TS INOX 1200mm(h=100mm)	RITTAL	TS 8701.200
-800A1	3	4.01.09.011.122	SOCLE TS INOX 600mm(h=100mm)	RITTAL	TS 8701.060
-800A1	1	4.01.09.011.121	CABINET SIDES TS INOX (2000x600m	RITTAL	TS 8700.060
-800A1	2	E.01.09.011.043	INSTALLATION PLATE (Cabinets 200	RITTAL	PS 4591.700
-800A1	2	4.01.09.011.124	COVER DOOR UNION TS(Inox)600mm	RITTAL	TS 8700.160
-800A1	12	4.01.09.011.089	JUNCTION FOR TS CABINETS	RITTAL	TS 8800.500
-800A1	8	4.01.09.011.090	JUNCTION IN ANGLED FOR CABINET	RITTAL	TS 8800.430
-800A1	12	4.01.09.011.113	EXTERNAL UNION (Inox)	RITTAL	TS 8700.000
-800A1	1	4.01.09.011.171	SIDE PANEL CABINET TS (2000X600)	RITTAL	TS 8700.069.BOOM XXXXX
-800A1	4	4.01.09.011.148	RAIL OF MONTAGE TS 18	RITTAL	TS 8612.260
-800A1	150	4.01.09.011.109	TORX SCREW (CABINET)	RITTAL	SZ 2486.300
-800A1	4	4.01.09.011.008	ELECTRICAL CABINET ACCESORY (gui	RITTAL	PS 4596
-800E5	1	4.19.02.128.003	ADHESIVE WARNS DOORS (DIN A5)	no definido	Adhesivo aviso cerrar puertas (Formato DIN-A5)
-800E6	1	4.19.02.128.003	ADHESIVE WARNS DOORS (DIN A5)	no definido	Adhesivo aviso cerrar puertas (Formato DIN-A5)
-800E7	1	4.19.02.128.003	ADHESIVE WARNS DOORS (DIN A5)	no definido	Adhesivo aviso cerrar puertas (Formato DIN-A5)
-801E2	1	4.02.04.011.001	GROUND TERMINAL BAR	RITTAL	DK 7113
-801E3	1	4.02.04.011.001	GROUND TERMINAL BAR	RITTAL	DK 7113
-801E4	1	4.02.04.011.001	GROUND TERMINAL BAR	RITTAL	DK 7113
-801E5	1	4.02.04.011.001	GROUND TERMINAL BAR	RITTAL	DK 7113
-801E6	1	4.02.04.011.001	GROUND TERMINAL BAR	RITTAL	DK 7113
-801E7	1	4.02.04.011.001	GROUND TERMINAL BAR	RITTAL	DK 7113
-801E8	1	4.02.04.011.001	GROUND TERMINAL BAR	RITTAL	DK 7113
-801E9	1	4.02.04.011.001	GROUND TERMINAL BAR	RITTAL	DK 7113

POSITION	QUANTITY	CODE	PART DESIGN	MANUFACTURER	MANUFACTURER REFERENCE
-801E10	1	4.02.04.011.001	GROUND TERMINAL BAR	RITTAL	DK 7113
-804E4	1	4.03.09.160.004	BOX ABS (240x160x90mm)	ROSE + KRIEGER	T 2401 Ref. 03240200 (antes Ref. 09.162409)
-804E5	1	4.03.09.160.006	BOX ABS (120x160x90mm)	ROSE + KRIEGER	ROS0003601M Ref. 09.121609 (OPACA IP66)
-804E6	1	4.03.09.160.008	BOX ABS(360x160x100mm)	ROSE + KRIEGER	T 251 Ref. 03251000 (antes Ref. 09.163610)
-804E7	1	4.03.09.160.008	BOX ABS(360x160x100mm)	ROSE + KRIEGER	T 251 Ref. 03251000 (antes Ref. 09.163610)
-804E9	1	4.02.05.010.006	PUSH-BUTTON YELLOW (1 HOLE)	MOELLER	M22-I1Y
-804E10	1	4.02.05.010.008	PUSH-BUTTON WHITE (6 HOLES)	MOELLER	M22-I6
-804E11	1	4.02.05.010.008	PUSH-BUTTON WHITE (6 HOLES)	MOELLER	M22-I6
-804E12	1	4.02.05.010.006	PUSH-BUTTON YELLOW (1 HOLE)	MOELLER	M22-I1Y
-804E14	1	4.02.05.010.006	PUSH-BUTTON YELLOW (1 HOLE)	MOELLER	M22-I1Y
-804E15	1	4.02.05.010.006	PUSH-BUTTON YELLOW (1 HOLE)	MOELLER	M22-I1Y
-804E16	1	4.02.05.010.004	PUSH-BUTTON WHITE (4 HOLES)	MOELLER	M22-I4
-804E17	1	4.02.05.010.006	PUSH-BUTTON YELLOW (1 HOLE)	MOELLER	M22-I1Y
-804E20	1	4.02.05.010.006	PUSH-BUTTON YELLOW (1 HOLE)	MOELLER	M22-I1Y
-804E21	1	4.02.05.010.006	PUSH-BUTTON YELLOW (1 HOLE)	MOELLER	M22-I1Y
-804E30	1	4.02.05.010.009	RACORD UNION BUTTON	MOELLER	M22-XI
-804E31	1	4.02.05.010.009	RACORD UNION BUTTON	MOELLER	M22-XI
-804E32	1	4.02.05.010.009	RACORD UNION BUTTON	MOELLER	M22-XI
-805E1	1	4.03.09.160.004	BOX ABS (240x160x90mm)	ROSE + KRIEGER	T 2401 Ref. 03240200 (antes Ref. 09.162409)
-805E4	1	4.03.09.160.006	BOX ABS (120x160x90mm)	ROSE + KRIEGER	ROS0003601M Ref. 09.121609 (OPACA IP66)
-805E5	1	4.03.09.160.006	BOX ABS (120x160x90mm)	ROSE + KRIEGER	ROS0003601M Ref. 09.121609 (OPACA IP66)
-805E7	1	4.03.09.160.004	BOX ABS (240x160x90mm)	ROSE + KRIEGER	T 2401 Ref. 03240200 (antes Ref. 09.162409)
-807E1	1	4.01.09.011.152	ELECTRICAL CABINET TS (1200x2000	RITTAL	AE 1019.609.BOOM XXXXX
-815A1	1	4.01.09.051.052	ELECTRICAL BOX (700 x 500 x 250)	SCHNEIDER	CRSX-75/250
-815A1	1	4.01.09.051.024	INSTALLATION PLATE (665x450mm)	SCHNEIDER	MM-75
-5F1	1	4.02.04.043.104	POINT FUSE HOLDER LED	WEIDMULLER	WSI 6/LD 10-36V DC/AC 1011300000
-5F1	1	4.06.02.022.005	FUSE 20x5mm 3A	ARISTON	20x5mm 3A
-5F2	1	4.02.04.043.104	POINT FUSE HOLDER LED	WEIDMULLER	WSI 6/LD 10-36V DC/AC 1011300000
-5F2	1	4.06.02.022.005	FUSE 20x5mm 3A	ARISTON	20x5mm 3A
-6F1	1	4.02.04.043.104	POINT FUSE HOLDER LED	WEIDMULLER	WSI 6/LD 10-36V DC/AC 1011300000

POSITION	QUANTITY	CODE	PART DESIGN	MANUFACTURER	MANUFACTURER REFERENCE
-6F1	1	4.06.02.022.005	FUSE 20x5mm 3A	ARISTON	20x5mm 3A
-6F2	1	4.02.04.043.104	POINT FUSE HOLDER LED	WEIDMULLER	WSI 6/LD 10-36V DC/AC 1011300000
-6F2	1	4.06.02.022.005	FUSE 20x5mm 3A	ARISTON	20x5mm 3A
-6F3	1	4.02.04.043.104	POINT FUSE HOLDER LED	WEIDMULLER	WSI 6/LD 10-36V DC/AC 1011300000
-6F3	1	4.06.02.022.005	FUSE 20x5mm 3A	ARISTON	20x5mm 3A
-6F4	1	4.02.04.043.104	POINT FUSE HOLDER LED	WEIDMULLER	WSI 6/LD 10-36V DC/AC 1011300000
-6F4	1	4.06.02.022.005	FUSE 20x5mm 3A	ARISTON	20x5mm 3A
-8F1	1	4.02.04.043.104	POINT FUSE HOLDER LED	WEIDMULLER	WSI 6/LD 10-36V DC/AC 1011300000
-8F1	1	4.06.02.022.005	FUSE 20x5mm 3A	ARISTON	20x5mm 3A
-8F2	1	4.02.04.043.104	POINT FUSE HOLDER LED	WEIDMULLER	WSI 6/LD 10-36V DC/AC 1011300000
-8F2	1	4.06.02.022.005	FUSE 20x5mm 3A	ARISTON	20x5mm 3A
-8F3	1	4.02.04.043.104	POINT FUSE HOLDER LED	WEIDMULLER	WSI 6/LD 10-36V DC/AC 1011300000
-8F3	1	4.06.02.022.002	FUSE 20x5mm 6A	ARISTON	20x5mm 6A
-8F4	1	4.02.04.043.104	POINT FUSE HOLDER LED	WEIDMULLER	WSI 6/LD 10-36V DC/AC 1011300000
-8F4	1	4.06.02.022.002	FUSE 20x5mm 6A	ARISTON	20x5mm 6A

3				Date	22.07.2014	NURTURE, INC. (USA)	ACMAVOLPAK	TYPE OF MACHINE: SM-360 F4 WD	MATERIAL LIST	=
2				Draw.	A.LLEONART			PROJECT Nº: 24981A		+
1				Comp.		Nº ORDER 13.025		DRAWING Nº		Sheet 54
	Modification	Date	Name	Norm	DIN					54 Sh.

ACMAVOLPAK